RULES FOR BUILDING AND CLASSING

UNDERWATER VEHICLES, SYSTEMS AND HYPERBARIC FACILITIES 2002

American Bureau of Shipping
Incorporated by Act of Legislature of
the State of New York 1862

ABS Plaza
16855 Northchase Drive
Houston, TX 77060 USA

This Page Intentionally Left Blank

Foreword

The 2002 edition of the *Rules for Building and Classing Underwater Vehicles, Systems and Hyperbaric Facilities* incorporates all Rule Changes and Corrigenda items since 1990 and has been reorganized and reformatted from the 1990 edition in line with the currently-used formatting styles. Also, some requirements have been revised for clarity and others to more accurately reflect actual practice. References to other ABS Rules have been updated in line with the current numbering system.

Several of the changes are made to provide consistency with the latest ASME PVHO-1 Safety Standard for Pressure Vessels for Human Occupancy (ASME PVHO-1). In this regard, "Requirements for Acrylic Components," as was Appendix 1 in the 1990 edition of the Rules, has been removed from the 2002 *Underwater Vehicles Rules*. Users of these Rules are to refer to the latest edition, including addenda, of ASME PVHO-1 for these requirements.

The effective date of each technical change is shown in parentheses at the end of the subsection/ paragraph titles within the text of each Section. Unless a particular date and month are shown, the effective date is 1 January of the year shown.

Note Regarding the Changes to Section 1 *(1 January 2008)*

For the 2008 edition, Section 1, "Conditions of Classification" was consolidated into a generic booklet, entitled *Rules for Conditions of Classification (Part 1)* for all vessels other than those in offshore service. The purpose of this consolidation was to emphasize the common applicability of the classification requirements in "Section 1" to ABS-classed vessels, other marine structures and their associated machinery, and thereby make "Conditions of Classification" more readily a common Rule of the various ABS Rules and Guides, as appropriate.

Thus, Section 1 of these Rules specifies only the unique requirements applicable to underwater vehicles, systems and hyperbaric facilities. These supplemental requirements are always to be used with the aforementioned *Rules for Conditions of Classification (Part 1)*.

This Page Intentionally Left Blank

RULES FOR BUILDING AND CLASSING

UNDERWATER VEHICLES, SYSTEMS AND HYPERBARIC FACILITIES

CONTENTS

This Page Intentionally Left Blank

SECTION 1 **Scope and Conditions of Classification**

1 Classification *(1 January 2008)*

The requirements for conditions of classification are contained in the separate, generic ABS *Rules for Conditions of Classification (Part 1)*.

Additional requirements specific to underwater vehicles, systems, and hyperbaric facilities are contained in the following portions of this Section.

3 Classification Symbols and Notations *(1 January 2008)*

A listing of Classification Symbols and Notations available to the Owners of vessels, offshore drilling and production units and other marine structures and systems, "List of ABS Notations and Symbols" is available from the ABS website "http://www.eagle.org/absdownloads/index.cfm".

The following notations are specific to underwater vehicles, systems and hyperbaric facilities.

3.1 Classed Units *(2006)*

Manned or occasionally manned underwater vehicles, underwater facilities, hyperbaric facilities, and diving simulators which have been built to the satisfaction of the Surveyors to the Bureau to the full requirements of these Rules, or their equivalent, where approved by the Committee for the service will be classed and distinguished in the *Record* by the symbols ✠ **A1** followed by the appropriate notation, such as **Submersible**, **Passenger Submersible**, **Personnel Capsule**, **Diving Bell**, **Habitat**, etc.

3.3 Classed Systems

In addition to the Classification of the individual underwater vehicles, underwater facilities, and hyperbaric facilities mentioned in 1/3.1, a system may be classed and distinguished in the *Record* by the symbols ✠ **A1** followed by the appropriate notation, such as **Diving System**, **Underwater Complex**, provided all of the manned or occasionally manned components meet these Rules and all other components are certified by this Bureau and are in full compliance with these Rules.

3.5 New and Existing Underwater Units or Systems Not Built Under Survey

Underwater vehicles, diving systems, hyperbaric facilities etc. not built under survey to this Bureau but for which classification is requested at a later date, will require submittal of available documentation as listed in Subsections 1/7 and 1/9 in conjunction with the following:

i) Welding procedures (WPS) and performance qualifications records (PQR)

ii) NDT records

iii) Material mill test reports

iv) All other certificates of past surveys and tests results conducted by the original certifying agency, insofar as such documentation is available and valid

v) Written test procedures for the tests and trials required to be performed for classification

Additionally, the system will be subject to a special classification survey, hydrostatic and functional tests. Where found satisfactory and thereafter approved by the Committee, the underwater unit or system will be classed and distinguished in the *Record* by the appropriate symbols and notations as described in 1/3.1 and 1/3.3, but the mark ✠ signifying the survey during construction will be omitted.

3.7 Other Conditions

The Committee reserves the right to refuse classification of any unit or system in which the machinery, life support, piping, electrical systems, etc., are not in accordance with the requirements of these Rules.

5 Rules for Classification *(1 January 2008)*

5.1 Application of Rules

These Rules in association with the latest edition of the ABS *Rules for Building and Classing Steel Vessels (Steel Vessel Rules)*, present the requirements for the classification of underwater vehicles, systems and hyperbaric facilities intended for use in manned underwater operations as defined in Section 2. For individual certification of support components of classed units refer to Appendix 1 of these Rules.

7 Submissions of Plans, Calculations, Data and Test Results

7.1 Submission Schedule and Number of Copies

Before commencement of fabrication, plans and other documents indicating the required particulars are to be submitted in triplicate. Vendor plans and other documents are to be submitted in quadruplicate if fabrication site is different from installation site. An additional copy of all plans and documents is to be available for the Surveyor performing surveys after construction at the location where the unit or system is operated.

7.3 Documentation to be Submitted *(2002)*

The plans and details required for review and approval are as follows and are to be submitted as applicable to the particular design features and/or systems.

7.3.1 Design and Operational Parameters *(2007)*

Design pressures and depths

Design temperatures

Hydrostatic test pressures

Design sea state conditions

Maximum operating depth

Maximum mission time

Maximum number of occupants (passengers and crew) in each unit and/or system

Maximum weight of units including occupants, contents, entrapped water, etc.

Maximum towing speed/towing line tension

Maximum speed while surfaced and submerged

7.3.2 General

General arrangement

Cross-section assembly

Outboard profile

Dimensional details of pressure hull, pressure vessel(s) and scantlings

Material specifications and grades, including tensile and impact values, for all pressure retaining or load bearing items

Weld details of pressure hull, pressure vessel(s) and scantlings

Welding procedures to include base and filler materials, pre and post weld heat treatment, tensile and impact values, extent of nondestructive testing.

Out-of-roundness tolerances

Fabrication tolerances

Dimensional details of penetrators, hatch rings, hatch details, lugs and any other internal or external connection to the hull

Penetrator sealing arrangements

Hatch sealing arrangements

Nameplate, including nameplate material and method of attachment

Plan showing all hull valves, fittings and penetrations

Exostructure details

Dimensional details of viewport components

Hard ballast tanks design details

Soft ballast tanks design details

Piping systems including pump capacities and pressure relief devices

Ballast piping systems

Layout of control stands

Equipment foundation and support arrangements with details where such foundations and supports increase stresses in the pressure hull or experience significant stress due to the operating loads encountered

Release devices and arrangement for jettisonable weights and equipment

Propeller details including shafting, bearings and seals

Propulsion motors, thrusters and wiring diagram

Steering control system

Electrical distribution system

Battery capacity, arrangement and main feeder scheme

Lifting and handling system

Depth indicating systems

Emergency systems

Fire fighting system

Details for permanently installed pressure vessels

Documentation for portable pressure vessels including standards of construction and design calculations for external pressure if units may at any time be subject to this condition.

List and location of implodable volumes

Materials and dimensions of umbilicals including cross sectional details

Any additional system deemed necessary to the intended operations

7.3.3 Life Support Systems and Equipment

Life support system details, both normal and emergency

Life support system capacities, fluids contained and supply arrangement

Specifications for environmental control systems and equipment including heating, gas analysis (CO_2, CO, CH_4, O_2, etc), absorption, circulation, temperature control, humidity control, equipment for tracing contaminants

Component list including manufacturer, model, design specifications and test documentation for all equipment used in the life support system

For gas analyzers: specifications of type of gas to be detected, principle of detection, range of pressures under which the instrument may be used

Lodging facilities and drainage systems in hyperbaric chambers

7.3.4 Procedures

Procedures for out-of-roundness and sphericity measurements

Cleaning procedures for breathing gas systems

Inclining experiment procedures

Functional test procedures

Sea trial procedures for normal and emergency conditions

7.3.5 Support Systems Provided by Diving Vessels *(2008)*

Drawings, specifications, data and calculations are to be submitted for all support systems provided by the diving vessel for all diving systems classed in accordance with these Rules. Support systems include electrical power systems, compressed air systems, hydraulic systems, deck foundations and under deck supporting structure that are supplied by the diving vessel and not an integrated part of the diving system.

For diving systems installed on ABS classed vessels these support systems are to be in accordance with the *Steel Vessel Rules*. When an ABS-classed diving system is installed on non-ABS-classed vessel, documentation that these systems have been reviewed and approved by the Society classing the diving vessel is to be provided. Alternatively the details may be provided to the Bureau for review.

7.5 Calculations *(2002)*

The following calculations and analyses are to be submitted for review:

- Pressure vessel stress analysis in compliance with Section 6
- Foundation stress analysis
- Pressure hull support reaction analysis
- Analysis of lifting load and stresses induced in the hull
- Window calculations in compliance with Section 7

- Life support system analysis
- Heat/cooling consumption for the hyperbaric chamber or underwater vehicle under the design conditions and the expected environmental temperatures
- Electrical load analysis and loss of power, power sources; power demands
- Short circuit current calculations
- Coordination of short circuit protection devices (coordination study)
- Calculation for the center of gravity and center of buoyancy
- Intact stability analysis
- Damage stability analysis
- Hydrodynamic ascent calculations under normal and emergency conditions

7.7 Operational Data

The following operational data are to be submitted:

- Description of operations
- Description of units and intended service

7.9 Test Results

Data for the following tests, which are to be performed to the satisfaction of Surveyor, are to be submitted:

- Material tests
- Procedure and welder qualification test results
- Out-of-roundness measurements before and after hydrostatic test
- Hydrostatic tests
- Strain gauge tests, as applicable
- Electrical system insulation tests
- Life support tests
- Functional test of completed unit or chamber
- Test dive of completed underwater unit at rated depth (to include deadweight survey and inclining experiment)

9 Manuals

9.1 Operating Manual *(2007)*

An operating manual describing normal and emergency operational procedures is to be provided and is to be submitted for review. The manual is to include the following as applicable.

- System description
- Operation check-off lists (list to include equipment requiring operational status verification or inspection prior to each dive/operation and verification of the existence of appropriately updated maintenance schedule – see 1/9.3)
- Operational mission time and depth capabilities

- Sea state capabilities (see Appendix 4, Table 1)
- Geographical dive site limitations (such as maximum current, night/limited visibility operation and list of operational and environmental hazards, if any, to be avoided.) as related to the design parameters addressed in Subsections 1/7 and 12/3
- Special restrictions based on uniqueness of design and operating conditions
- Life support system description including capacities
- Electrical system description
- Launch and recovery operation procedures
- Liaison with support vessel
- Emergency procedures, developed from systems analysis, for situations such as power failure, break in lifting cable, break in umbilical cord, deballasting/jettisoning, loss of communications, life support system malfunction, fire, entanglement, high hydrogen level, high oxygen level, internal and external oxygen leaks, stranded on bottom, minor flooding, and specific emergency conditions characteristic of special types of systems.
- Emergency rescue plan (see 8/11.1 and 8/12)
- Color coding adopted

9.3 Maintenance Manual *(2002)*

A maintenance manual containing procedures for periodic inspection and preventive maintenance techniques is to be submitted for review. The manual is to include the expected service life of the pressure hull and of other vital components/equipment (e.g., viewports, batteries, etc.), methods for recharging life support, electrical, propulsion ballast and control systems and specific instructions for the maintenance of items requiring special attention.

9.5 Availability *(2007)*

The operating and maintenance manuals together with operational and maintenance records are to be readily available at the operation site and copies are to be made available to the Surveyor upon request. Summarized procedures for normal and emergency operations are to be carried onboard the unit.

11 Personnel *(2002)*

Underwater and related operations are a complex undertaking. In addition to the fitness represented by Classification as described in 1-1-1/5 of the ABS *Rules for Conditions of Classification (Part 1)*, appropriate personnel are of utmost importance to the successful and safe completion of a mission. Such issues fall under the purview of local jurisdictions, as noted in Section 1-1-5 of the above referenced Part 1, and so are specifically not addressed by the Bureau.

Owners and Operators of commercial and non-commercial underwater units are ultimately responsible for, and are to assure themselves of, the competence of those performing activities related to the unit. Guidance may be obtained from the unit manufacturer, persons or entities believed by the Owner/ Operator to be competent in the field and with the subject equipment, organizations such as the Association of Diving Contractors (ADC), from publications such as the *Guidelines for Design, Construction and Operation of Passenger Submersible Craft* published by the International Maritime Organization (IMO) or from other sources as may be deemed appropriate by the owner/operator.

SECTION 2 Definitions

The following definitions and terms are to be understood in absence of other specifications.

1 Clinical Hyperbaric Treatment Chamber

A rigid-walled hyperbaric chamber that is used, in general, to treat patients. These treatment chambers are primarily hospital-based.

3 Deck Decompression Chamber

A unit consisting, in general, of two chambers (entry lock and main lock) installed on a support ship. This chamber allows for gas saturation, lodging, recovery and desaturation periods for divers performing a mission in a diving bell.

5 Design Depth

The depth in meters (feet) of water (seawater or fresh water) equivalent to the maximum pressure for which the underwater unit is designed and approved to operate, measured to the lowest part of the unit.

7 Design Internal Pressure

The maximum pressure for which the hyperbaric chamber is designed and approved to operate.

9 Design Mission Time

The maximum effective recharging interval for life support, compressed air and electrical systems for which the underwater vehicle or hyperbaric chamber is designed and approved to perform the intended function under normal operating conditions.

11 Diver Lock-out Compartment

A compartment within an underwater system or vehicle provided with internally pressurizing capability to transfer a diver to the work site from the submersible and vice versa.

13 Diver Training Hyperbaric Center

A complex intended for training gas saturation divers and simulation of working dives.

15 Diving Bell

A manned non-self-propelled submersible tethered unit consisting of at least one chamber internally pressurized in order to allow a diver to be transported to and from an underwater site.

17 Diving System

Compressed air or gas mixture saturation system for divers. It is composed of a diving bell, a bell launch and recovery system, a deck decompression chamber and other components deemed necessary to the mission.

19 Fire-restricting Materials *(2002)*

Fire-restricting materials are those materials having properties complying with IMO Resolution MSC.40(64); this resolution provides standards for qualifying marine materials as fire-restricting materials. Fire-restricting materials should: have low flame spread characteristics; limit heat flux, due regard being paid to the risk of ignition of furnishings in the compartment; limit rate of heat release, due regard being paid to the risk of spread of fire to any adjacent compartment(s); and limit the emission of gas and smoke to quantities not dangerous to the occupants.

21 Habitat

An underwater structure installed on the ocean floor, which is permanently or periodically manned. It is in general maintained at ambient pressure or at a pressure of one atmosphere.

23 Handling System

See Subsection 2/31, “Launch and Recovery System”.

25 Hyperbaric Facility

A chamber or combination of chambers intended for operation with human occupancy at internal pressure above atmospheric.

27 Hyperbaric Lifeboat

A self-propelled lifeboat intended for multiple human occupancy in saturated conditions.

29 Hyperbaric Rescue Capsule

A free-floating decompression chamber for human occupancy that can be maintained with gas mixture at a pressure. In case of emergency, it is launched from the vessel, rig or platform in distress and may drift free on wind and currents.

31 Launch and Recovery System

The lifting equipment necessary for raising, lowering and transporting the underwater unit between the surface and the working site.

33 Light Ship *(2002)*

The condition in which a vessel is complete in all respects but without consumables, stores, cargo, crew and effects and without any liquids on board except that machinery fluids, such as lubricants and hydraulics, are at operating levels.

35 Manipulator

A remotely operated work arm.

37 Open Bell

A non-pressurized compartment at ambient pressure that allows the diver to be transported to and from the work site, allows the diver access to the surrounding environment, and is capable of being used as a refuge during diving operations.

39 Personnel Capsule

A manned, non-self-propelled submersible tethered unit consisting of one or more chambers, all of which are maintained at an internal pressure near one atmosphere.

41 Portable Decompression Chamber

A unit intended for human occupancy under greater than atmospheric pressure conditions, that is installed on a vehicle such as a helicopter or truck. This chamber may be utilized for therapeutic purposes.

43 Rated Depth

The depth in meters or feet of water (seawater or fresh water) equivalent to the pressure for which the underwater unit has been operationally tested in the presence of the Surveyor, measured to the lowest part of the unit. The rated depth may not exceed the design depth.

45 Rated Internal Pressure

The pressure for which the hyperbaric chamber has been operationally tested in the presence of the Surveyor. The rated internal pressure may not exceed the design internal pressure.

47 Remotely Operated Vehicle

Unmanned, remotely actuated underwater vehicle used for a variety of functions. These functions include inspection of underwater structures, photography, cleaning, trenching, etc.

49 ROV

See Subsection 2/47, “Remotely Operated Vehicle”.

51 Submersible

A self-propelled craft capable of carrying personnel and/or passengers while operating underwater, submerging, surfacing and remaining afloat. Internal pressure is normally maintained at or near one atmosphere.

53 Submersible Decompression Chamber

See Subsection 2/15, "Diving Bell".

55 Tethered Submersible

A tethered self-propelled unit capable of carrying personnel and/or passengers underwater. Internal pressure is normally maintained at or near one atmosphere.

57 Umbilical

The connecting hose to a tethered submersible unit and from this unit to the divers. It may contain life support, surveillance, communication, remote control and power supply cables.

59 Underwater Complex

A complex comprising of any combination of habitats with transfer chambers, and may include a tethered or untethered submersible unit and its launch and recovery system.

61 Underwater Container

A permanently unmanned submersible vessel containing equipment that is to be protected from water. It may be anchored to the ocean floor.

63 Underwater System

A system comprised of one or more units with all their support components necessary to conduct a specified manned underwater operation such as a diving system and an underwater complex.

65 Underwater Vehicle

A self-propelled craft intended for underwater operations that may or may not be independent of surface support. This would include submersibles and ROVs.

67 Unit *(2007)*

For the purpose of these Rules, a "unit" is an underwater vehicle, system or hyperbaric facility.

69 Wet Submersible

A non-pressurized, open-hulled submersible at ambient pressure which is self-propelled and capable of ascent and descent, and which allows the divers access to the surrounding environment.

71 Working Chamber

An underwater structure permanently installed on the ocean floor, intended for periodically manned operations. It is maintained at ambient pressure or at the pressure of one atmosphere and may be flooded when not in use.

This Page Intentionally Left Blank

SECTION 3 General Requirements and Safeguards

1 Nonmetallic Materials

1.1 General

Materials and equipment inside manned compartments are to be such that they will not give off noxious or toxic fumes within the limits of anticipated environments or under fire conditions. Where compliance with this requirement has not been demonstrated through satisfactory service experience, a suitable analysis or testing program is to be performed or submitted. Systems are to be designed and equipped to minimize sources of ignition and combustible materials. See also Subsection 8/37.

1.3 Paints, Varnishes and Coatings *(2007)*

Excessive paint and coating thicknesses on exposed interior surfaces are to be avoided unless noncombustible materials are used. Nitrocellulose or other highly flammable or noxious fume-producing paints are not to be used.

1.5 Internal Materials *(2007)*

Linings, deck coverings, ceilings, insulation, partial bulkheads and seating are to be constructed of materials that are fire-restricting under the anticipated environmental conditions. Consideration will be given to materials having properties complying with recognized standards acceptable to the Bureau. See Subsection 2/19 for the definition of fire-restricting materials.

1.7 External Materials *(2002)*

Decks, deck coverings, skins and fairings are to be of materials that will not readily ignite or give rise to toxic or explosive hazards at elevated temperatures.

3 Fire Fighting

3.1 General *(2007)*

All units are to be provided with fire detection, alarm and extinguishing systems. Automatic fire detection and fire alarm systems are to be provided in normally closed, unmanned spaces within the main pressure hull containing electrical or mechanical equipment. For compartments always occupied by alert persons during operation, the occupants may comprise the fire detection and alarm system provided such occupants possess normal ability to smell. Salt water is not to be used as an extinguishing agent. Propellants of extinguishing mediums are to be nontoxic. Consideration is to be given to the increase in compartment pressure resulting from use of extinguishers. See also 8/7.5.2.

3.3 Extinguishing Systems *(2007)*

Each compartment within the main pressure hull is to be provided with a suitable fire extinguishing system. This may include portable extinguishers. Capacity calculations for all systems are to be submitted for review.

Chemical extinguishing agents or propellants with toxic or narcotic effects for any operating conditions are not permitted. Choking hazards of extinguishing agents should be taken into consideration.

3.5 Fixed Systems *(2002)*

When units are provided with a fixed fire extinguishing system using a gaseous medium suitable for manned spaces, the system is to be designed to evenly distribute the extinguishing medium throughout each compartment of the pressure boundary. Capacity of the system is to be such that a complete discharge of the extinguishing medium will not result in a toxic concentration.

3.7 Portable Systems *(2002)*

When units are not provided with a fire extinguishing system per 3/3.3, the fire extinguishing means is to consist of portable extinguishers using distilled water or other non-conductive liquid agent, dry chemical or a gaseous medium suitable for use in manned spaces. The capacity of a portable extinguishing system using a gaseous medium is to be such that complete discharge of the extinguishers will not result in a toxic concentration.

3.9 Surface Fire Protection

For classed systems, the areas where manned chambers and facilities are situated on decks or similar structures, are to be equipped with fire detection, fire alarm and fire fighting systems suitable for the location and area concerned.

5 Communications for Manned Units *(2007)*

All units are to have voice communication systems providing the capability to communicate with the surface control station. The systems are to include communication among pilot, lock-out compartments and interconnected chambers. Speech unscramblers are to be provided when mixed gas is used. The communication systems are to be supplied by two independent sources of power one of which is to be the emergency source of power. Surface radios are to be included and have the capability of transmitting on the Safety Channel 16-VHF. Underwater communication systems for passenger submersibles are to maintain contact with the support facility when it is at a distance equivalent to twice the design depth of the unit. For other units, the design range is to be suitable to meet the operational requirements of the specific application. See also Subsection 11/23.

7 Emergency Locating Devices *(2009)*

A surface locating device such as a strobe light or VHF radio and a subsurface locating device such as an acoustic pinger, sonar reflector or buoy are to be provided. Surface detectors or other equipment as required for the detection of subsurface locating devices is to be available.

Diving bells and other similar tethered units are to have an emergency locating device designed to operate in accordance with paragraph 2.12.5 of IMO Resolution A.831 (19) "Code of Safety for Diving Systems" (see Appendix 6).

Electric locating devices not designed and equipped to operate using a self-contained power source are to be arranged to be powered by both the normal and the emergency power supplies. Non-electric locating devices are to be deployable without electric power.

9 Surface Anchoring, Mooring and Towing Equipment *(2002)*

An accessible towing point, appropriately sized for the anticipated conditions, is to be provided. When anchoring and mooring equipment is carried on the submersible, the number, weight, strength and size of anchors, chains and cables are to be appropriate for the anticipated conditions.

11 Emergency Recovery Features

Permanent features for the attachment of recovery equipment are to be provided. It is to be demonstrated, by appropriate analysis, that recovery feature attachments are adequate for lifting under the heaviest emergency condition following a casualty. The analysis is to include consideration of entrained water, mud and sand. Recovery features need not be provided for habitats or other permanently or semi-permanently attached underwater structures.

13 Proof Testing *(2002)*

13.1 Hydrostatic Test

After out-of-roundness measurements have been taken, all externally-pressurized pressure hulls are to be externally hydrostatically proof tested in the presence of the Surveyor to a pressure equivalent to a depth of 1.25 times the design depth for two cycles. Pressure hulls designed for both internal and external pressure are also to be subjected to an internal hydrostatic pressure test in accordance with Part 4, Chapter 4 of the *Steel Vessel Rules*. Acrylic components are to be tested in accordance with Section 7 of these Rules.

13.3 Strain Gauging

During the external proof testing in 3/13.1, triaxial strain gauges are to be fitted in way of hard spots and discontinuities. The location of strain gauges and the maximum values of stress permitted by the design at each location are to be submitted for approval prior to testing.

13.5 Waiver of Strain Gauging

Hydrostatic testing without strain gauges will be acceptable for units that are duplicates of a previously tested unit and have a design depth not greater than the tested unit. Units designed and built in accordance with the requirements of Section VIII Division 1 of the ASME Boiler and Pressure Vessel Code or other recognized code having an equal or higher design margin (factor of safety) may be accepted without strain gauging. (This does not preclude the use of design standards having a lower factor of safety. See also 3/13.9 and 6/1 of these Rules.)

13.7 Post Test Examination

Following testing, all pressure boundary welds are to be examined in accordance with the requirements for magnetic particle, liquid penetrant or eddy current testing in accordance with Section 5, and out-of-roundness and sphericity measurements are to be taken. Acceptance criteria are to be in accordance with Section 5.

13.9 Alternate Test procedures

When the pressure boundary is designed in accordance with an acceptable standard other than Section 6 of these Rules, hydrostatic testing may be conducted in accordance with the requirements of that standard. Such units are to be tested for two cycles in the presence of the Surveyor. Strain gauging is to be in accordance with 3/13.3 and 3/13.5. Post-test examination is to be in accordance with 3/13.7, except that the acceptance criteria are to be in accordance with the standard used.

15 Test Dive *(2007)*

A test dive to the design depth is to be conducted in the presence of the Surveyor. All penetrations and all joints accessible from within are to be inspected visually at a depth of approximately 30.5 m (100 ft) before proceeding to greater depths. All components, such as hull valves, whose operation is subjected to submergence pressure and which are required for safe operation, are to be operationally tested at this depth, if practicable. A log of the inspection of all hatches, viewports, mechanical and electrical penetrators, and valves is to be maintained. The submergence is then to be increased in increments of approximately 20 percent of the design depth until design depth is reached. At each 20 percent increment constant depth is to be maintained and accessible welds and other closures are to be inspected, and valves checked. Unsatisfactory operations of a valve or unsatisfactory leak rate may be cause to abort the test. The test dive may be a single dive, as described, or a series of dives to accomplish the same purpose. The test dive is also to demonstrate satisfactory performance of life support systems, air conditioning systems (if installed), propulsion systems, electrical systems, and items required for safe operations. Where the depth of water available is less than the design depth, both the rated depth (depth reached during test dive) and the design depth will be indicated in the *Record*. The rated depth may subsequently be increased by performing a test dive to a greater depth, not exceeding the design depth, in the presence of the Surveyor.

17 Buoyancy, Emergency Ascent, and Stability

17.1 Submersibles and Other Untethered Units *(2002)*

17.1.1 Normal Ballast System *(2008)*

Each manned unit is to be fitted with a ballast system capable of providing normal ascent and descent and necessary trim adjustments. Ballast tanks that are subjected to internal or external pressure are to comply with the requirements of Section 6. Two independent means of deballasting are to be provided; one is to be operable with no electric power available. Consideration will be given on case-by-case basis for both means of deballasting to be operated electrically, provided both means are completely independent (i.e., they have two independent power sources, separate wiring, separate actuators or motors, etc.).

17.1.2 Depth Keeping Capability

Submersibles are to be capable of remaining at a fixed depth within any operational depth and within all normal operating conditions.

17.1.3 Emergency Surfacing System *(2007)*

In addition to the normal ballast system, an emergency surfacing system is to be provided. This system is to provide positive buoyancy sufficient to ascend to the surface from any operational depth and safely evacuate all occupants. The system is to have at least two positive manual actions for operation and is to be independent of electric power. For deep-diving units, special consideration will be given to the equivalent alternative arrangements of the emergency surfacing systems as determined suitable by the Bureau based on submission of a risk assessment study. The emergency surfacing system is to operate properly under all anticipated conditions of heel and trim and is to comply with one of the following.

17.1.3(a) The system is to jettison sufficient mass so that if the largest single floodable volume, other than the personnel compartment, is flooded, the ascent rate will be equal to the normal ascent rate. The released mass may consist of a drop weight, appendages subject to entanglement, or a combination of both.

17.1.3(b) The personnel compartment may be provided with a means of separating it from all other parts of the system, including appendages, provided the personnel compartment is positively buoyant and meets the stability criteria of 3/17.1.6 below when released.

17.1.4 Intact Surface Stability

Each unit is to have sufficient intact stability on the surface so that in the worst loading condition, when subjected to a roll expected under the worst conditions listed in Appendix 4, Table 1 for the design sea state, the unit will not take on water through any hatch that may be opened when surfaced. In addition, the distance from the waterline to the top of coamings around hatches that may be opened with the unit afloat is not to be less than 2.5 feet with the unit upright.

17.1.5 Underwater Operation

Adequate static and dynamic stability in submerged conditions is to be demonstrated by the tests and calculations required in Subsection 3/15 and Subparagraph 3/17.1.7 below. For all normal operational conditions of loading and ballast, the center of buoyancy is to be above the center of gravity by a distance *GB* which is the greater of either 51 mm (2 in.) or the height as determined below:

$$GB_{\min} = nwNd/W \tan \alpha$$

where

n	=	0.1 (This represents 10 percent of the people aboard moving simultaneously)
w	=	79.5 kg (175 pounds) per person (for passenger submersibles, w may be taken as 72.5 kg (160 lbs) per person)
d	=	the interior length of the main cabin accessible to personnel, in mm (in.). This should not include machinery compartments if they are separated from the main cabin with a bulkhead.
N	=	total number of people onboard the submersible.
W	=	the total weight (in units consistent with w) of the fully loaded submersible, not including soft ballast.
α	=	25 degrees (representing the maximum safe trim angle. A smaller angle may be required if battery spillage or malfunction of essential equipment would occur at 25 degrees. This assumes that each person has an individual seat that is contoured or upholstered so that a person can remain in it at this angle).

17.1.6 Emergency and Damaged Condition

Submersible units are to have adequate stability under any possible combination of dropped jettisoned masses. Under some emergency conditions, the distance between the center of buoyancy and center of gravity may be reduced, but in no case is it to be less than one-half of that required in 3/17.1.5 above. Inverted surfacing is not permitted.

17.1.7 Calculations and Experiments

The following calculations are to be submitted and tests are to be witnessed by the Surveyor.

17.1.7(a) Detailed Weight Calculations. Calculations are to be provided and are to include calculated positions of center of buoyancy (*CB*), center of gravity (*CG*), total weight of the submarine (*W*) and displacement (Δ). This can be achieved by maintaining a detailed spreadsheet during design and construction.

17.1.7(b) Hydrostatic Model. A mathematical model is to be used to calculate Δ, the positions of the center of buoyancy (*CB*) and the metacenter (*CM*), by computing the hydrostatic properties during design.

17.1.7(c) Deadweight Survey and Lightship Measurement. The location, number and size of all items listed on the spreadsheet are to be physically checked after construction and outfitting. The completed submersible is weighed with a scale and the measured weight is then compared to the total spreadsheet weight, compensating for any extraneous weights that were onboard the submersible at the time of testing.

17.1.7(d) Inclining Experiments. The completed submersible is inclined on the surface and submerged in order to fix *GB* (the distance between *CG* and *CB*) and *GM* (the distance between *CG* and the metacenter *CM*). Guidance for design and performance of inclining experiments may be obtained from ASTM F 1321 and Enclosure (2) to Navigation and Vessel Inspection Circular No. 5-93 (NVIC 5-93). Such testing is not required for units that are duplicates of a previously tested unit.

17.1.7(e) Scenario Curves. *CB*, *CG*, *W*, *CM*, and Δ are to be assembled in graphic form for interpretation and comparison with criteria.

17.3 Diving Bells, Personnel Capsules and Other Tethered Units

All units are to be inherently buoyant or are to be provided with emergency jettisoning systems which release sufficient mass so that the unit, including umbilicals and tethers which are not released, will ascend to the surface in no more than one half the time of the capacity of the emergency life support system. The jettisoning system is to require at least two positive manual actions and is to be independent of electric power. Alternatively, tethered units which are part of a diving system or complex are to have two independent lifting means (each capable of raising the unit to the surface) complying with the requirements of Appendix 4.

17.5 Units Intended for Unmanned or Short Manned Operations

Special consideration will be given to submersible working chambers, submersible containers and other similar units intended for unmanned or short manned operations.

19 Protection

External piping, wiring, and equipment are to be located to minimize the likelihood of damage during handling operations, or they are to be suitably protected.

21 Corrosion Protection *(2007)*

All units, their external metallic structures and accessories are to be effectively protected against marine corrosion, marine growth and galvanic action.

Parts of these structures that are rendered inaccessible by fairings, skins or other external protections or obstructions are to be provided with a permanent corrosion protection system.

The interior of the unit is to be provided with a suitable anti-corrosion coating. See also 3/1.3 of these Rules for additional coating requirements.

23 Nameplates

Diving bells and similar units are to be fitted with permanent nameplates indicating design depth, maximum allowable internal and external working pressure, and internal hydrostatic test pressure. This information is also to be stamped on a rim of a flange of the unit. The nameplates are to be stainless steel or other suitable material and are to be permanently attached.

25 Navigational Equipment

Submersible units are to be provided with the following equipment:

i) At least one compass or gyro

ii) An obstacle avoidance system such as sonar

iii) Where low-light operations are expected, appropriate lighting is to be provided

iv) Means for determining distance from the seabed

v) Two independent means of measuring the depth of the unit. If both means are electrical, then at least one must be operable upon loss of the main source of power

vi) Means to indicate heel and trim, as applicable

vii) Locating devices as per Subsection 3/7

27 Hazards

27.1 Access

Hatch coaming ways are to be free from obstacles.

27.3 Hydrogen Buildup

When lead-acid batteries are located within the pressure boundary, they are to be in a segregated chamber that can be ventilated during recharging. Means with sufficient capacity are also to be provided to remove hydrogen generated during discharge. See also 8/7.7.2 and 11/11.9.

27.5 Entanglement

External appendages susceptible to entanglement are to be provided with means of disconnecting them from the main hull of a submersible. Alternatively, considerations may be given to availability of rescue divers in conjunction with remotely operated vehicles having equivalent capability.

27.7 Display, Alarm and Interlock for Hatch Open Position

In order to prevent the pilot from initiating descent with the hatches in the open position the following are to be provided in addition to the normal check procedures among pilot, submersible-crew and support-vessel-diving-supervisor, unless operational procedures state that at least two people verify hatch position prior to initiating descent.

27.7.1 Display

A failsafe display is to be provided at the pilot stand and is to clearly show the position of the hatch covers.

27.7.2 Alarm

A visual and audible alarm is to be provided at the pilot stand and is to be activated at any attempt of the pilot to initiate descent with the hatch covers in the open position.

29 Access Hatches *(2007)*

Units carrying more than 6 persons are to be fitted with at least two access hatches. Special consideration will be given to an alternative number and arrangements of hatches, based on the design, safety evaluations and risk analysis demonstrating an equivalent level of safety.

The number and location of the access hatches are to consider the length/diameter of the unit, the length/diameter of the pressure hull, the number of persons, the conditions of operation, the rescue facilities, the relevant risks such as fire and smoke, safe evacuation under all operational and emergency conditions on the surface, etc.

All hatches are to be operable from both internal and external sides. Hatches should be designed to seat with pressure. Hatches that unseat with pressure will be considered based on the application of the unit. The means for opening and closing of hatches should permit operation by a single person under all anticipated operating and emergency conditions. Hatches are to have means for securing in the open and closed positions. Means are to be available to ensure that hatches are clear of water before opening. All hatches are to be considered when evaluating the surface stability of the unit. See 3/17.1, 3/27.7 and Subsection 8/33.

31 Thermal Protection *(2007)*

Based on the operational parameters of the unit, sufficient emergency thermal protection for all occupants is to be carried on board. The emergency thermal protection is to be capable of providing sufficient protection for the maximum dive time, as well as the reserve life support duration in accordance with Subsection 8/11 or 8/12, and the emergency life support duration as per Subsection 8/13 or 8/14.

33 Hyperbaric Evacuation Systems *(2009)*

Hyperbaric Evacuation Systems are to be designed, constructed and tested in accordance with the applicable requirements of these Rules and IMO Resolution A.692(17) "Guidelines and Specifications for Hyperbaric Evacuation Systems".

SECTION 4 Materials

1 General

Materials are to comply with this Section and Chapters 1 and 3 of the ABS *Rules for Materials and Welding (Part 2)*, as applicable.

3 Pressure Boundary Material Specifications

3.1 Plates

Plate materials of pressure boundaries, including attachments, are to comply with one of the following.

i) *Steel (2008):* ABS Hull Grades E, EH32, EH36; U.S. Navy Grades HY-80 and HY-100 per MIL-S-16216; ASTM A516 Grades 55, 60, 65, 70; ASTM A537 Class 1 and 2; ASTM A517 Grades, A, B, E, F, J

ii) *Aluminum:* ASTM B209 alloys 5083, 5086, 5456, 6061-T6 (see Section 5)

iii) *Titanium Alloys:* ASTM B265 Grade 5

iv) *Stainless Steel:* ASTM A240 Type 304 or 316

v) *Acrylic Plastics* (cast polymethyl methacrylate): ASTM D702 and Section 7

3.3 Bolts, Extrusions, Forgings, and Shapes

Materials of bolts, extrusions, forgings, and shapes are to comply with a recognized standard at least of similar quality to the plate materials specified in 4/3.1 (e.g. MIL-S-23009 for HY-80 forgings, ASTM A350 LF2 or LF3 for forgings comparable to ASTM A516).

3.5 Materials Complying with Other Standards

Consideration will be given to the use of material complying with other recognized standards suitable for the service intended. Approval of the use of other materials will depend on satisfactory evaluation and approval of the specifications prior to construction.

5 Testing

For steel intended for pressure boundaries and pressure retaining welded attachments, the tests, examinations, and inspections required by the material specifications and those indicated below are to be performed in the presence of and to the satisfaction of the Surveyor. Materials other than steel are to be examined, tested, and evaluated for soundness in accordance with recognized standards.

5.1 Inspection

All plates over 12.7 mm (0.5 in.) are to be ultrasonically examined. Steel plates with any discontinuity causing a total loss of back reflection which cannot be contained within a circle, the diameter of which is 75 mm (3.0 in.) or one half the plate thickness, whichever is greater, are unacceptable. Steel plates are to be examined in accordance with the procedures of ASTM A435 and the following:

i) Scanning is to be continuous along perpendicular grid lines on nominal 230 mm (9.0 in.) centers, using a suitable coupling medium such as water, soluble oil, or glycerin.

ii) Grid lines are to be measured from the center or one corner of the plate, with an additional path within 50 mm (2.0 in.) of all edges of the plate on the searching surface.

iii) Where complete loss of back reflection is detected along a given grid line, the entire surface area of the squares adjacent to this indication is to be continuously scanned. The boundaries of areas where complete loss of back reflection is detected are to be established.

5.3 Toughness Testing

Steel plates, shapes, and forgings are to be tested in accordance with 4/5.3.1 or 4/5.3.2, except this testing is not required for material 16 mm (0.625 in.) or less, that is normalized, fully killed, and made in accordance with fine grain practice or for Type 304 and 316 stainless steel.

5.3.1 Charpy Tests

Charpy V-notch tests are to be conducted on three specimens from each steel plate, shape, and forging, as heat treated. The tests are to be conducted in accordance with ASTM A370 and ASTM E23 using Charpy V-notch specimens. The test temperature and the energy absorption for the materials indicated in Subsection 4/3 are to be in accordance with the values given in the material specification or ASTM A20 Table A1.15 "Generally Available Grade-Thickness-Minimum Test Temperature Combinations Meeting Charpy V-Notch Requirements Indicated (Normalized or Quenched and Tempered Condition)", as applicable but in no case less conservative than the values given in Section 4, Table 1. For other materials, the test temperature and energy absorption are to be in accordance with the material specification, but in no case less conservative than the values given in Section 4, Table 1.

5.3.2 Drop Weight Tests:

Two specimens from each plate, shape, and forging, as heat treated, are to be drop weight tested in accordance with ASTM E208. Both specimens are to exhibit no break performance when tested at the following applicable temperature:

As-welded fabrication	–28°C (–18°F)
Post-weld heat treated fabrication	–17°C (+2°F)
Seamless fabrication	–17°C (+2°F)

7 Corrosion and Galvanic Action

Protection against corrosion is to be provided as follows.

7.1 Ferritic Materials

Ferritic materials of pressure boundaries exposed to seawater or a seawater atmosphere are to have an increase in thickness over design requirements, protective coatings, or sacrificial anodes to insure that no reduction below design thickness will occur.

7.3 Galvanic Action

Precautions are to be taken to insure that dissimilar metals in combination will not cause metallic deterioration.

TABLE 1
Charpy Impact Testing Requirements

Min. Specified Yield Strength *kg/mm^2 (psi)*	*Min. Avg.*[(1)] *kg-m (ft-lb)*	*Test Temp.* *°C (°F)*
Up to 31 (44,000)	2.8 (20) [(2)]	-30 (-22)
31 (44,000) to 42 (60,000)	3.5 (25) [(2)]	-30 (-22)
42 (60,000) to 70 (100,000)	3.5 (25) [(2)]	-40 (-40)

Notes

1 *Longitudinal direction:* Transverse values may be two-thirds of the indicated longitudinal values.

2 Not more than one specimen is to exhibit a value below the specified minimum average and in no case is an individual value to be below 70 percent of the specified minimum average. The use of subsize specimens and retesting are to comply with 2-1-2/11.5 and 2-1-2/11.7 of the ABS *Rules for Materials and Welding (Part 2)*.

This Page Intentionally Left Blank

SECTION **5 Fabrication**

1 Material Identification

Materials of pressure parts are to carry identification markings which will remain distinguishable until completion of fabrication. The marks are to be accurately transferred prior to cutting, or a coded marking is to be used to identify each piece of material during subsequent fabrication if the original identification markings are cut out or the material divided into two or more parts. Materials of pressure boundaries of underwater systems may be marked by stamping, using low stress stamps. An as-built sketch or a tabulation of materials identifying each piece of material with the mill test report and its markings is to be maintained. See Section 7 for marking of acrylic material.

3 Alignment Tolerance

3.1 Butt Weld Alignment

Alignment of sections at edges to be butt welded is to be such that the maximum offset is not greater than the applicable amount as listed in the following table, where t is the nominal thickness of the thinner section at the joint.

Section Thickness in mm (in.)	*Offset in mm (in.)*	
	Direction of Joints in Cylindrical Shells	
	Longitudinal	*Circumferential*
Up to 12.5 (0.5), incl.	$^1/_4 t$	$^1/_4 t$
Over 12.5 (0.5) to 19 (0.75), incl.	3.2 ($^1/_8$)	$^1/_4 t$
Over 19 (0.75) to 38 (1.5), incl.	3.2 ($^1/_8$)	4.8 ($^3/_{16}$)
Over 38 (1.5) to 51 (2.0), incl.	3.2 ($^1/_8$)	$^1/_8 t$
Over 51 (2.0)	$^1/_{16} t$ (9.5 ($^3/_8$) max.)	$^1/_8 t$ (19 ($^3/_4$) max.)

Note: Any offset within the allowable tolerance above should be faired at a 3 to 1 taper over the width of the finished weld or, if necessary, by adding additional weld metal beyond what would otherwise be the edge of the weld.

3.3 Heads and Spherical Vessels

Joints in spherical vessels, in heads, and between cylindrical shells and hemispherical heads are to meet the above requirements for longitudinal joints.

5 Joints

Joints are categorized in accordance with Section 5, Figure 1.

5.1 Category A and B

All joints of Category A and B are to be full penetration welds. Joints of Category A and B made with consumable inserts or with metal backing strips which are later removed are acceptable as full penetration welds, provided the back faces of such joints are free or made free from weld surface irregularities and are in agreement with 5/5.5.

5.3 Category C and D

All joints of Category C and D are to be full penetration welds.

5.5 Joint Properties

Joints are to have complete penetration and fusion for the full length of the weld. They are to be free from injurious undercuts, overlaps, or abrupt ridges or valleys to eliminate sources of stress concentration. To assure that weld grooves are completely filled so that the surface of the weld metal at any point does not fall below the surface of the adjoining plate, weld metal may be built up as reinforcement on each side of the plate. Reinforcement is not to exceed that permissible for radiographic examination procedures and the following:

Plate Thickness in mm (in.)	*Maximum Thickness of Reinforcement in mm (in.)*
Up to 12.7 (0.5)	1.6 ($^1/_{16}$)
Over 12.7 (0.5) to 25.4 (1.0)	2.4 ($^3/_{32}$)
Over 25.4 (1.0) to 50.8 (2.0)	3.2 ($^1/_8$)
Over 50.8 (2.0)	4.0 ($^5/_{32}$)

7 Welding of Ferrous Materials

Welding is to comply with this Section and Section 2-4-2 of the ABS *Rules for Materials and Welding (Part 2)*, as applicable.

7.1 General

i) Precautions are to be taken to minimize absorption of moisture by low-hydrogen electrodes and fluxes.

ii) All surfaces to be welded are to be free from moisture, grease, loose mill scale, excessive rust or other oxidation, and paint.

iii) The areas from which temporary attachments have been removed are to be dressed smooth and examined by a magnetic particle, liquid penetrant or eddy current method. If weld repairs are necessary, they are to comply with 5/7.17.

7.3 Qualifications and Procedures

All weld procedures and welder qualifications are to be submitted and approved in accordance with Section 2-4-3 of the ABS *Rules for Materials and Welding (Part 2)*. The Surveyor may, at his discretion, accept electrodes, welding procedures and previous welder's qualification tests in a shipyard or fabricator's plant where it can be established that the particular electrodes, welding procedures, and welders have been qualified satisfactorily for similar work under similar conditions and will employ weld procedures previously approved.

7.5 Special Tests

The applicable special tests of 2-4-3/5.9 of the ABS *Rules for Materials and Welding (Part 2)* apply to new materials, high strength steels, new or unusual welding methods, and use of electrodes other than those listed in "Approved Welding Electrodes, Wire-Flux and Wire-Gas Combinations". For material with a specified minimum yield strength above 42 kg/mm^2 (60,000 psi), except for HY80 and HY100, Charpy V-notch impact tests of the midpoint of the heat affected zone are to be conducted, and the test results are to comply with the requirements for transverse specimens indicated in 4/5.3.1. For high heat input processes, such as electroslag and electrogas welding, Charpy V-notch impact tests of the weld metal, fusion line and 1 mm, 3 mm, 5 mm from the fusion line are to be conducted, and the test results are to comply with the requirements for transverse specimens indicated in 4/5.3.1 or 5/7.7 for the applicable weld metal material.

7.7 Weld Metal Impact Properties

7.7.1 Yield Strength ≤ 27 kg/mm^2 (38,000 psi)

For steel material with a minimum specified yield strength equal to or less than 27 kg/mm^2 (38,000 psi) a minimum average value of 4.8 kg-m (35 ft-lb) at –20°C (–4°F) is to be attained. Filler metals listed in "Approved Welding Electrodes, Wire-Flux and Wire-Gas Combination" as ABS Grade 3 filler metal or as an equivalent American Welding Society (AWS) Classification are considered to meet the impact requirement.

7.7.2 27 kg/mm^2 (38,000 psi) <Yield Strength ≤ 42 kg/mm^2 (60,000 psi)

For steel material with a minimum specified yield strength greater than 27 kg/mm^2 (38,000 psi) and equal to or less than 42 kg/mm^2 (60,000 psi), a minimum average value of 2.8 kg-m (20 ft lb) at –40°C (–40°F) is to be attained. Filler metals listed in "Approved Welding Electrodes, Wire-Flux and Wire-Gas Combinations" as ABS Grade 3Y filler metal or as an equivalent AWS Classification are considered to meet the impact requirement.

7.7.3 Yield Strength Greater than 42 kg/mm^2 (60,000 psi)

For steel material with a minimum specified yield strength greater than 42 kg/mm^2 (60,000 psi), a minimum average value of 2.8 kg-m, (20 ft-lb) at –51°C (–60°F) is to be attained.

7.9 Weld Metal Tensile Strength

The weld metal utilized is to have a tensile strength comparable to the base material.

7.11 Postweld Heat Treatment

Postweld heat treatment is to be conducted for steel when over 19 mm (0.75 in.) in thickness, except no postweld heat treatment is required for U.S. Navy Grades HY-80 and HY-l00 and ASTM A517 Grades.

For tempered steel, the postweld heat treatment temperature is not to exceed the tempering temperature. Heat treatment temperature and time is to comply with the following:

Minimum Holding Temperature degrees C (degrees F)	*Minimum Holding Time hr/25 mm (hr/in.)*
594 (1100)	1
566 (1050)	2
538 (1000)	3
510 (950)	5
482 (900)	10

Postweld heat treatment procedures are to be detailed in the weld procedure and submitted for review.

7.13 Production Testing

For Category A and B joints production impact testing of weld metal at the midpoint of the heat affected zones is to be performed for materials with a specified minimum yield strength above 42 kg/mm^2 (60,000 psi), except such testing need not be performed for HY-80 and HY-100 fabrication. The extent of testing is to be to the Surveyor's satisfaction and comply with the following:

7.13.1 Temperature

Charpy V-notch tests are to be conducted in accordance with ASTM A370 and ASTM E23 at the temperature used for base material testing. The specimens are to have their longitudinal axis transverse to the weld.

7.13.2 Tests Required

Production tests are to be conducted for the following:

i) Each welding procedure used

ii) Each position employed in automatic or semi-automatic welding

iii) For manual welding, on specimens from vertical test plates. If all welding is to be in flat position only, flat position test plates may be used.

7.13.3 Impact Values

Impact values obtained from production testing are to be at least as high as those required for the base material.

7.15 Nondestructive Examinations

One hundred percent volumetric examination is to be conducted on all Category A, B, C, and D full penetration groove welds, (i.e., 100 percent radiographic examination is to be conducted on all butt joints, 100 percent ultrasonic examination is to be performed on all joints other than butt joints). For butt welds, consideration will be given to the acceptance of ultrasonic examination in lieu of radiographic examination. Methods of surface examination, such as liquid penetrant, magnetic particle, or eddy current may additionally be required by the Surveyor prior to the hydrostatic testing.

7.15.1 Inspection for Delayed (Hydrogen Induced) Cracking

Nondestructive testing of weldments in steels of 42 kg/mm^2 (60,000 psi) yield strength or greater is to be conducted at a suitable interval after the welds have been completed and cooled to ambient temperature. The interval is to be at least 72 hours unless specially approved otherwise. At the discretion of the Surveyor, a longer interval and/or additional random inspection at a later date may be required. Further, at the discretion of the Surveyor, the 72 hour interval may be reduced to 24 hours for radiographic or ultrasonic inspections, provided a complete visual and random magnetic particle, liquid penetrant or eddy current inspection are conducted 72 hours after the welds have been completed and cooled to ambient temperature.

7.15.2 Post Hydrostatic Test Examination

Following hydrostatic testing, all pressure boundary welds are to be examined by magnetic particle or liquid penetrant or eddy current method. See also Subsection 3/13.

7.15.3 Radiographic and Ultrasonic Examinations:

Procedures and acceptance standards for radiographic and ultrasonic examinations are to be in accordance with the following:

7.15.3(a) Radiographic Examination. Radiographic examinations of butt joints are to be in accordance with the ABS *Guide for Nondestructive Inspection of Hull Welds (NDI Guide)*. Procedures for radiographic examinations of joints other than butt joints are to be in accordance with a recognized standard such as Section V Article 2 of the ASME Boiler and Pressure Vessel Code or equivalent. Butt joints are to meet the class A acceptance standards of the *NDI Guide* for porosity and slag inclusion only. Cracks, lack of fusion, and incomplete penetration are unacceptable, regardless of length.

7.15.3(b) Ultrasonic Examination. Ultrasonic examinations of butt joints are to be in accordance with the *NDI Guide*. Procedures for ultrasonic examinations of joints other than butt joints are to be in accordance with a recognized standard such as Section V, Article 5 of the ASME Boiler and Pressure Vessel Code, or equivalent. Signals that are interpreted to be cracks, lack of fusion, and incomplete penetration are unacceptable regardless of length. All other signals that are interpreted to be linear discontinuities are unacceptable if the amplitude of the signal exceeds the reference level and discontinuities have lengths exceeding the following:

6 mm ($^1/_4$ in.)	for t up to 19 mm ($^3/_4$ in.)
$^1/_3 t$	for t from 19 mm ($^3/_4$ in.) to 57 mm ($2^1/_4$ in.)
19 mm ($^3/_4$ in.)	for t over 57 mm ($2^1/_4$ in.)

where t is the thickness of the weld being examined.

7.15.4 Magnetic Particle, Liquid Penetrant and Eddy Current Examinations

Procedures and acceptance standards for magnetic particle, liquid penetrant and eddy current examinations are to be in accordance with the following:

7.15.4(a) Magnetic particle and liquid penetrant examinations. The examination procedures are to be in accordance with Section V Articles 6 and 7 of the ASME Boiler and Pressure Vessel Code, or equivalent.

The following relevant indications are unacceptable:

i) Any cracks and linear indications

ii) Rounded indications with dimensions greater than 5 mm ($^3/_{16}$ in.)

iii) Four or more rounded indications in a line separated by 1.6 mm ($^1/_{16}$ in.) or less edge to edge

iv) Ten or more rounded indications in any 3870 mm^2 (6 in^2) of surface with the major dimension of this area not to exceed 152.4 mm (6 in.) with the area taken in the most unfavorable location relative to the indications being evaluated.

7.15.4(b) Eddy Current Examination. Special consideration will be given to the acceptance of eddy current technique in lieu of other surface flaw detecting methods (magnetic particle or liquid penetrant). Procedures and equipment used for eddy current examinations of welds are to be specially approved. The equipment is to be operated by qualified and skilled technicians who are experienced in performing eddy current examinations. Technician qualification and results of eddy current examinations are to be to the satisfaction of the attending Surveyor. Any signals that are interpreted to be relevant discontinuities are to be further investigated by magnetic particle testing and any indication found is to be evaluated as per 5/7.15.4(a) above. In addition, when eddy current is used as method of surface flaw detection, it is to be supplemented with a sufficient amount of magnetic particle examination to verify that the accuracy of the eddy current method is maintained.

7.17 Weld Repairs

Welds which exhibit discontinuities that are considered unacceptable are to be excavated in way of the defect to sound metal. The excavated area is to be checked by an appropriate NDE method to determine that the discontinuity has been completely removed prior to repair by welding. The areas to be repaired are to be rewelded using qualified welding procedures, approved electrodes and qualified welders. The rewelded area is to be reexamined by the methods specified for the examination of the original weld to show that it has been satisfactorily repaired. See also 5/7.11 for post weld heat treatment requirements. If the depth of the deposit removed does not exceed the lesser of 9.5 mm ($^3/_8$ in.) or 10 percent of the weld thickness, the examination may be made by magnetic particle, liquid penetrant method, or eddy current technique.

9 Welding of Non-Ferrous Materials *(2002)*

9.1 General

Welding of non-ferrous material will be subject to special consideration.

9.3 Welded Joints in Aluminum

9.3.1 Alloys listed in 4/3.1ii)

The ultimate and yield strengths for welded aluminum alloys listed in 4/3.1ii) are to be taken from Table 30.1 of the ABS *Rules for Building and Classing Aluminum Vessels*.

9.3.2 Other Alloys and Tempers

Tensile and yield strengths for welded aluminum alloys and/or tempers not listed in 4/3.1ii), where such use is permitted, are to be obtained from recognized references or approved test results.

11 Out-of-Roundness, Sphericity, and Local Departure from Circularity

11.1 Measurements

Upon completion of fabrication and heat treatment, deviations from true circular form are to be measured before and after hydrostatic testing. The measurements are to be conducted to the Surveyor's satisfaction, and the results submitted for review.

11.3 Permitted Deviations of Cylinders and Conical Sections

The deviations from true circular form are not to exceed one (1) percent of the nominal diameter at the cross section. Where the cross section passes through an opening or within one inside diameter of the opening measured from the center of the opening, the permissible-out-of-roundness may be increased by two (2) percent of the inside diameter of the opening. When the cross section passes through any other location normal to the axis of the vessel, including head-to-shell junctions, the difference in diameters shall not exceed one (1) percent. Additionally, for vessels subject to external pressure, the deviation measured with a template complying with 5/11.3.3 is not to exceed the value of *e* from Section 5, Figure 2. The lengths, diameters and thicknesses are to be taken in constant units.

11.3.1 Length for Cylinders

Length, L for cylinders is measured parallel to the axis.

11.3.1(a) No Stiffening Rings. The distance between head-bend lines plus one-third the depth of each head.

11.3.1(b) With Stiffening Rings. The greatest center-to-center distance between two adjacent stiffening rings.

11.3.1(c) Stiffening Ring to Head. The distance from the center of the first stiffening ring to the head tangent line plus one-third of the depth of the head, all measured parallel to the axis of the vessel.

11.3.2 Length of Cones and Conical Sections

Length of cones and conical sections, L and D_o values to be used in the figures are given below where:

L_e = equivalent length of conical section = $(L_o/2)\ (1 + D_s/D_L)$ where

L_o = overall length of conical section under consideration.

D_s = outside diameter at small end of conical section under consideration.

D_L = outside diameter at large end of conical section under consideration.

i) At large diameter end

$L = L_e$

$D_o = D_L$

ii) At the small diameter end

$L = L_e(D_L/D_s)$

$D_o = D_s$

iii) *At the midlength diameter*

$L = L_e[2D_L/(D_L + D_s)]$

$D_o = 0.5(D_L + D_s)$

iv) *At any cross section having an outside diameter D_x*

$L = L_e(D_L/D_x)$

$D_o = D_x$

11.3.3 Template

Deviation measurements are to be made from a segmental circular template having the design inside or outside radius (depending upon where the measurements are taken) and a chord length equal to twice the arc length obtained from Section 5, Figure 3.

11.5 Permitted Deviations of Spheres and Hemispheres

11.5.1 General

The difference between the maximum and minimum inside diameters at any cross section is not to exceed one (1) percent of the nominal inside diameter at the cross section under consideration. The diameters may be measured on the inside or outside. If measured on the outside, the diameters are to be corrected for plate thickness at the cross section under consideration. When the cross section passes through an opening the permissible difference in inside diameters given above may be increased by two (2) percent of the inside diameter of the opening.

11.5.2 External Pressure

In addition to the requirements of 5/11.5.1, spheres, hemispheres, spherical portions of torispherical and ellipsoidal heads subject to external pressure are to comply with the following. The maximum plus or minus deviation from true circular form measured radially on the outside or inside of the vessel, is not to exceed 0.5 percent of the nominal inside radius of the spherical segment. Measurements are to be made from a segmental template having the design inside or outside radius (depending where measurements are taken) and a chord length, L_c, obtained from Section 5, Figure 4.

11.7 Thickness

11.7.1

For cylinders and spheres, the value of t is to be determined as follows:

i) For vessels with butt joints, t is the nominal plate thickness less corrosion allowance.

ii) Where the shell at any cross section is made of plates having different thicknesses, t is the nominal thickness of the thinnest plate less corrosion allowance.

11.7.2

For cones and conical sections, the value of t is to be determined as in 5/11.7.1 above except the thickness in *i)* and *ii)* is to be replaced by t_e where:

t_e = effective thickness of conical section,

$= t \cos \alpha$

α = one-half the apex angle, deg.

11.9 Location of Measurements

11.9.1

The above requirements are to be met in any plane normal to the axis of revolution for cylinders and cones and in the plane of any great circle for spheres.

For conical sections and cones a check shall be made at locations in 5/11.3.2i), ii), iii) and such other locations as may be necessary to satisfy the Surveyor that above requirements are met.

11.9.2

Measurements are to be taken on the surface of the base metal and not on welds or other raised parts of the material.

11.9.3

If repairs are needed to bring the completed vessel within above requirements, they are to be carried out with any approved process which will not impair the strength of the pressure hull. Sharp bends and flat spots are not permitted unless they were provided and approved for the original design.

13 Surface Finish

The surface finish of machined parts of pressure boundaries is generally not to exceed 6.35 μm (250 μin) rms. A surface finish of 0.8 μm (32 μin) is required for O-ring sealing surfaces unless otherwise specified by the manufacturer. Surface finish for viewport flanges is to comply with Section 7.

FIGURE 1
Illustration of Welded Joint Locations
Typical of Categories A, B, C and D

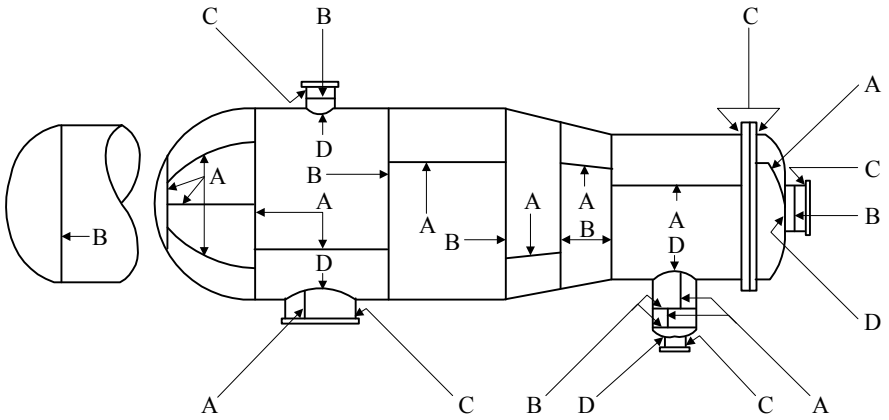

Category A locations are longitudinal welded joints within the main shell, communicating chambers, transitions in diameter or nozzles; any welded joint within a sphere, within a formed or flat head or within the side plates of a flat-sided vessel; circumferential welded joints connecting hemispherical heads to main shells, to transitions in diametr, to nozzles or to communicating chambers.

Category B locations are circumferetial welded joints within the main shell, communicating chambers, nozzles or transitions in diameter, including joints between the transition and a cylinder at either the large or small end; circumferential welded joints connecting formed heads other than hemispherical to main shells, to transitions in diameter, to nozzles or to communicating chambers.

Category C locations are welded joints connecting flanges, Van Stone laps, tube sheets or flat heads to main shell, to formed heads, to transitions in diameter, to nozzles or to communicating chambers; any welded joint connecting on side plate to another side plate of a flat-sided vessel.

Category D locations are welded joints connecting communicating chambers or nozzles to main shells, to spheres, to transitions in diameter, to heads or to flat-sided vessels, and those joints connecting nozzles to communicating chambers.

FIGURE 2
Maximum Permissible Deviation from Circular Form "*e*" for Vessels Under External Pressure

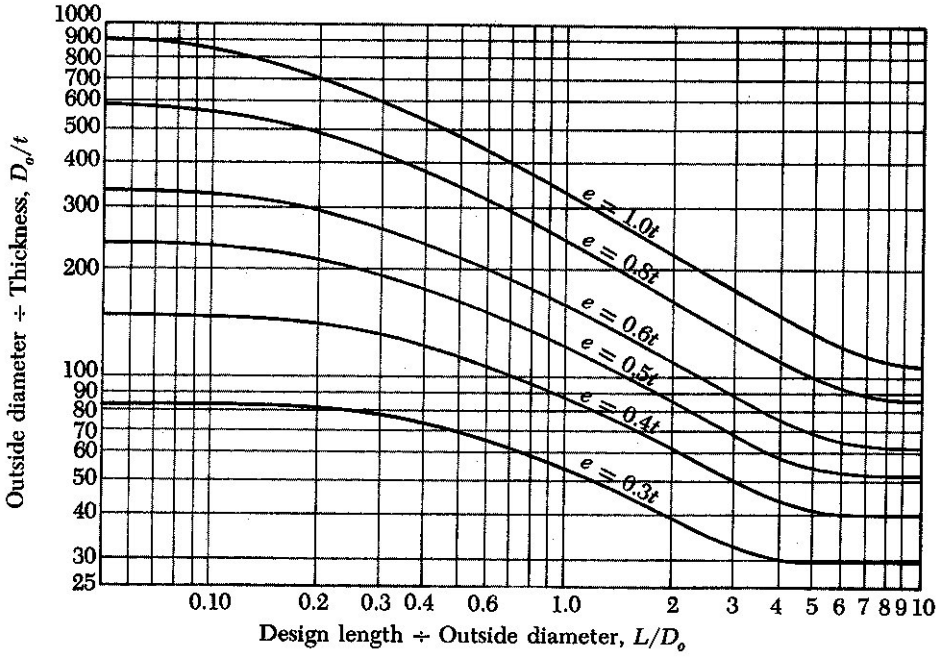

FIGURE 3
Arc Length

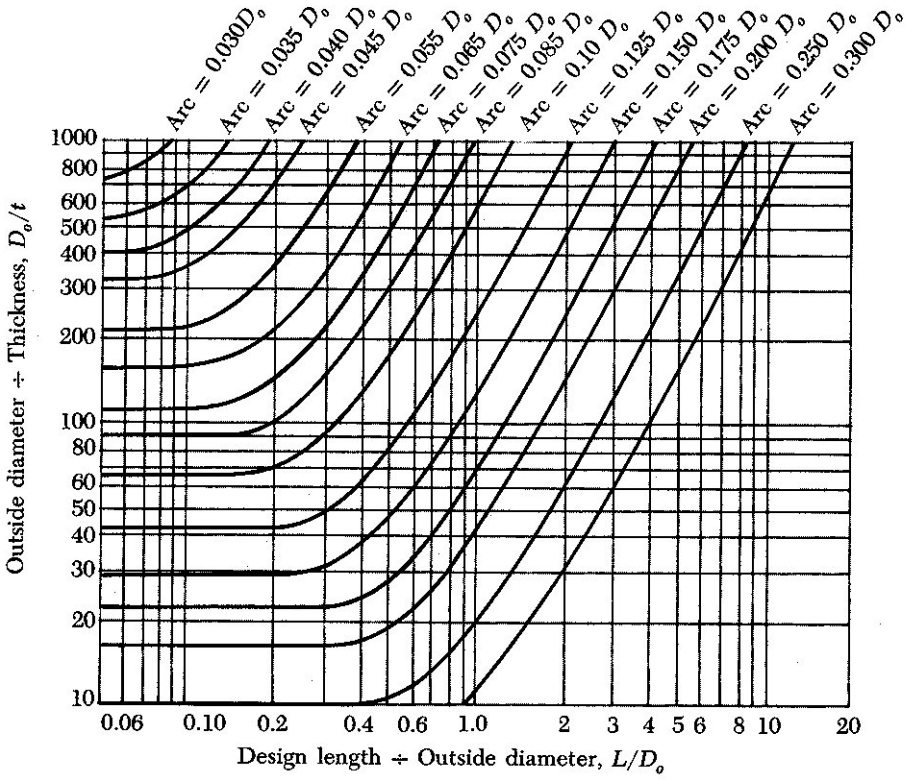

FIGURE 4
Values of Arc Length (L_c) for Out-of-roundness of Spheres

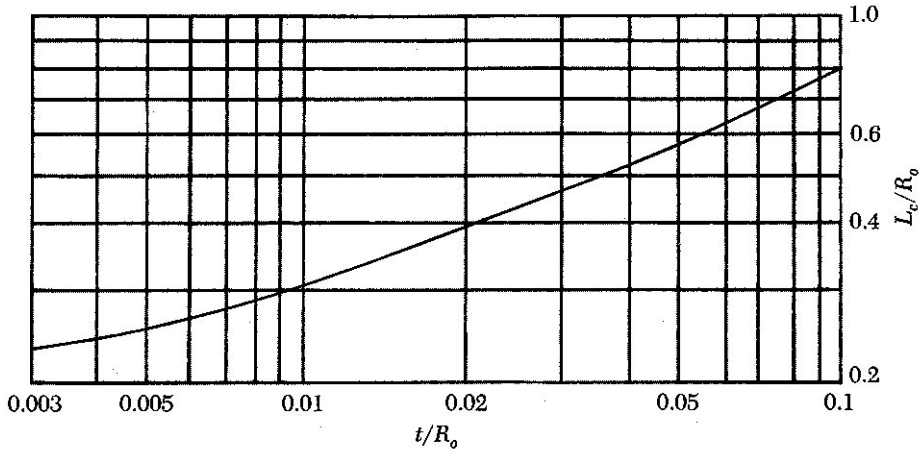

SECTION 6 Metallic Pressure Boundary Components

1 General

Metallic components of pressure boundaries are to comply with this Section. Designs based on other recognized standards will be given special consideration. The pressure vessel design rules in this Section are predicated on the fabrication tolerances as given in Section 5. Any consistent set of units may be used for the calculations required by this Section.

3 Design for Internal Pressure

Vessels subject to internal pressure are to comply with Part 4, Chapter 4 of the *Steel Vessel Rules*.

Each internal pressurized compartment is to be provided with a pressure relieving device to prevent the pressure from rising more than 10 percent above the maximum allowable working pressure. A quick operating, manual shut-off valve is to be installed between the compartment and the pressure relief device and is to be wired open with frangible wire. Rupture discs are not to be used, except in series with pressure relief valves.

5 Localized Loads

For external pressure applications, impact loadings, support reactions and localized loadings are to be analyzed as described below. Under these conditions, stresses are not to exceed the following limits:

Stress	*% of Minimum Specified Yield Strength*	*% of Minimum Specified Tensile Strength*
General membrane	80	—
Local membrane plus bending	120	75
Local membrane plus bending plus secondary membrane	200	100

5.1 Impact

Impact loadings due to mating under normal conditions and when misaligned 6.35 mm (0.25 in.) are to be analyzed. A force of not less than twice the weight of the mating vessel, including entrapped water and its contents, is to be used.

5.3 Lifting Force

Lifting lugs and lifting attachments are to be analyzed for forces of 2 g vertical (1 g static plus 1 g dynamic), 1 g transverse and 1 g longitudinal acting simultaneously under the most severe loading condition.

5.5 Localized Reactions

Bending and radial loads are to be analyzed based on forces and moments anticipated during operation.

5.7 Discontinuities

Localized stresses resulting from geometric discontinuities are to be analyzed.

7 Reinforcement

Penetrations are to be reinforced in accordance with Part 4, Chapter 4 of the *Steel Vessel Rules*. For external pressure the reinforcement need only be 50 percent of that required by the Rules and reinforcement pads are not to be used; all reinforcement is to be integral with shell and nozzle walls.

9 Fatigue *(2002)*

A fatigue analysis is to be submitted when it is anticipated that the life time full range pressure cycles N will exceed that obtained from the following equation:

$$N = [1160(3000 - T)/(Kf_\tau - 14500)]^2$$

where

T	=	temperature in degrees C (degrees F) corresponding to application of the cyclic or repeated stress
K	=	5688 SI/MKS units (4 U.S. units)
f_τ	=	range of cyclic stress kg/mm^2 (lb/in^2)

Pressure cycles of less than full pressure are to be included in N in the ratio p/P where p is the actual pressure of the cycle under consideration and P is the design pressure.

11 Drainage *(2002)*

Drainage openings are to be provided at points where liquid may accumulate.

Alternatively, fillers may be used in such locations provided they remain flexible, are adhered to the substrate per the manufacturer's instructions and field inspection procedures are included in the maintenance manual. Inspection procedures must permit detection of corrosion under the filler without removal of the filler or must require that the filler be removed and replaced, per the manufacturer's instructions, at each inspection.

13 Corrosion Allowance

A corrosion allowance in excess of the thickness required by the various formulations in this section is to be specified by the designer. All strength calculations are to be conducted with the corrosion allowance removed.

15 Definition and Determination of Yield Point and Yield Strength

15.1 Yield Point

The yield point is the first stress in a material, less than the maximum obtainable stress, at which an increase in strain occurs without an increase in stress. Yield point may be determined by the halt of the pointer, or from an autographic diagram. The 0.5 percent total extension under load method will also be considered acceptable.

15.3 Yield Strength

The yield strength is the stress at which a material exhibits a specified limiting deviation from the proportionality of stress to strain. Yield strength is to be determined by the 0.2 percent offset method. Alternatively, for material whose stress-strain characteristics are well known from previous tests in which stress-strain diagrams were plotted, the 0.5 percent extension under load method may be used.

17 Nomenclature

17.1 General

P Applied External Pressure

η Usage Factor

17.3 Material Properties

E Modulus of Elasticity

ν Poisson's ratio

σ_y specified minimum yield point or yield strength

17.5 Calculated External Pressures

P_a maximum allowable pressure for any failure mode

P_{all} allowable working pressure of the unit (to be taken as the lowest calculated P_a)

P_c cylinder inter-stiffener limit pressure

P_{co} cone inter-stiffener limit pressure

P_{cs} sphere limit pressure

P_{es} sphere linear classical buckling pressure

P_ℓ cylinder stiffener longitudinal yield stress pressure

$P_{\ell o}$ cone stiffener longitudinal yield stress pressure

P_m von Mises buckling pressure for a cylinder

P_{mo} von Mises buckling pressure for a cone

P_n cylinder overall instability pressure

P_{no} cone overall instability pressure

P_t cylinder stiffener circumferential and bending yield stress pressure

P_{to} cone stiffener circumferential and bending yield stress pressure

P_y yield pressure at midbay and midplane of a cylinder

P_{yo} yield pressure at midbay and midplane of a cone

P_{ys} sphere yield pressure

17.7 Shell Parameters

$$\theta = [3(1 - \nu^2)]^{1/4} M$$

$$Q = \theta/2$$

$$N = \frac{\cosh(2Q) - \cos(2Q)}{\sinh(2Q) + \sin(2Q)}$$

$$G = \frac{2(\sinh Q \cos Q + \cosh Q \sin Q)}{\sinh(2Q) + \sin(2Q)}$$

$$H = \frac{\sinh(2Q) - \sin(2Q)}{\sinh(2Q) + \sin(2Q)}$$

Note: Other symbols are defined where used.

19 Cylindrical Shells Under External Pressure

19.1 Shell Geometry

D_o outer diameter

L greater of L_b or L_s

L_b unsupported spacing between stiffeners

L_c compartment length for overall instability considerations

L_s center to center spacing of stiffeners

R mean radius

R_f radius to tip of the stiffener outstand away from the shell

R_o outer radius

R_s radius to centroid of stiffener cross section alone

t shell thickness

19.3 Stiffener Properties

A_s area of stiffener cross section alone

I moment of inertia of combined section consisting of stiffener together with an effective length of shell L_e about the centroidal axis of the combined section parallel to the axis of the cylinder

I_z moment of inertia of stiffener alone about the radial axis through the web

L_e effective length of cylindrical shell acting with the stiffener equal to the smaller of $1.5\sqrt{Rt}$ or $0.75\ L_s$.

t_w thickness of stiffener web

$\bar{z}$ distance of centroid of stiffener cross section alone to the closer shell surface

19.5 Inter-Stiffener Strength

19.5.1

Inter-stiffener strength is to be obtained from the following equation:

$P_c = P_m/2$ if $P_m/P_y \le 1$

$P_c = P_y[1 - P_y/(2P_m)]$ if $1 < P_m/P_y \le 3$

$P_c = \frac{5}{6}P_y$ if $P_m/P_y > 3$

where

$$P_m = \frac{2.42E[t/(2R)]^{5/2}}{(1-\nu^2)^{3/4}[L/(2R) - 0.45(t/(2R))^{1/2}]}$$

$$P_y = \frac{\sigma_y t/R}{1-F}$$

$$F = \frac{A[1-(\nu/2)]G}{A + t_w t + (2NtL/\theta)}$$

$$M = L/\sqrt{Rt}$$

$A = A_s(R/R_s)^2$ for external framing

$A = A_s(R/R_s)$ for internal framing

The maximum allowable working pressure based on inter-stiffener strength is given by:

$P_a = P_c\eta$ where $\eta = 0.80$

19.5.2

The limit pressure corresponding to the longitudinal stress at stiffeners reaching yield, is given by the following:

$$P_\ell = \frac{2\sigma_y t}{R}\left[1 + \left(\frac{12}{1-\nu^2}\right)^{1/2}\gamma H\right]^{-1}$$

$$\gamma = \frac{A[1-(\nu/2)]}{A + t_w t + (2NtL/\theta)}$$

The maximum allowable working pressure based on longitudinal stress at the frame is given by:

$P_a = P_\ell\eta$ where $\eta = 0.67$

19.7 Unstiffened Cylinders

Unstiffened cylinders are to be assessed using the inter-stiffener strength expressions given in 6/19.5.1 considering $F = 0$. L is to be taken as L_c (See 6/19.9). The axial length of a conical section adjacent to the cylinder(s) is to be included in the value of L_c (See Section 6, Figure 2) for all unstiffened cylinder-to-cone transitions without heavy members at their junctures. The t/R ratio is to be taken as that of any cylindrical or conical section within L_c which will give the lowest inter-stiffener limit pressure, P_c.

19.9 Length Between Support Members

L_c is the largest spacing between two heavy stiffeners, or the heavy stiffener and the dome end, or the entire (compartment) length between ends of the vessel. In the case of dome ends, the length L_c is to include 40 percent of the height of the head. See Section 6, Figure 2.

19.11 Heavy Stiffeners

Stiffeners used for purposes of reducing the compartment length L_c within which overall buckling performance is checked are termed heavy stiffeners and are to be designed to meet the requirements for heavy stiffeners in 6/19.15.2.

19.13 Overall Buckling Strength

The limit pressure corresponding to the overall buckling mode between heavy support members is obtained from the following equation:

$$P_n = \left(\frac{Et}{R}\right)A_1 + \frac{EIA_2}{LR^3}$$

where

$$A_1 = \frac{\lambda^4}{[A_2 + (\lambda^2/2)][n^2 + \lambda^2]^2}$$

$$\lambda = \frac{\pi R}{L_c}$$

$$A_2 = n^2 - 1$$

The number of lobes, *n,* expected at failure is a positive integer, 2 or higher (see Section 6, Figure 4), that results in the lowest P_n.

The maximum allowable working pressure based on overall buckling strength is given by:

$$P_a = P_n\eta \qquad \text{where } \eta = 0.50$$

19.15 Stiffeners

All stiffeners are to be attached to the shell by continuous welding. Any ring stiffener welded to a cylindrical shell is to comply with the following strength formulations relating to the maximum stress in the stiffener, stiffener tripping, local buckling of webs and flanges, and stiffener flexural inertia. These formulations apply to stiffeners whose outer flanges (where fitted) are symmetric about the web. Other geometries will be subject to special consideration.

19.15.1 Non-Heavy Stiffeners

19.15.1(a) Stress Limits. The yield pressure P_t, including the circumferential (hoop) stress and the bending stress arising from possible out-of-roundness, is calculated by satisfying the following equation:

$$\sigma_y = \frac{P_t\sigma_y}{p_{yf}} + \frac{Ec\delta(n^2 - 1)P_t}{(P_n - P_t)R^2}$$

where

n = number of overall instability lobes

P_n = corresponding buckling pressure as given in 6/19.13

δ = the allowable out-of-roundness, $^1/_2$ percent of R or $0.005R$.

The distance of the stiffener flange from the neutral axis of the combined stiffener and effective shell section L_e is denoted "c".

P_{yf} is calculated as follows:

$$P_{yf} = \frac{\sigma_y t R_f}{R^2[1-(\nu/2)-\gamma]}$$

The maximum allowable working pressure based on stiffener stresses is given by

$$P_a = P_t \eta \qquad \text{where } \eta = 0.50$$

19.15.1(b) Stiffener Tripping. The circumferential tripping stress for flanged stiffeners attached to the shell is to be obtained as follows:

$$\sigma_T = \frac{EI_z}{A_s R \bar{z}}$$

The tripping stress as obtained from the above equation is to be greater than the applicable yield stress σ_y.

19.15.1(c) Local Buckling. To address the possibility of local buckling of the flanges and webs of a stiffener cross section welded to the shell, the following slenderness limits are to be met:

Item	
Flat bars, other outstands	Width/Thickness $\leq 0.3\sqrt{E/\sigma_y}$
Web of flanged stiffener	Depth/Thickness $\leq 0.9\sqrt{E/\sigma_y}$

19.15.1(d) Inertia Requirements. The moment of inertia for the combined section consisting of a stiffener welded to the shell and the effective shell length L_e is to be not less than I obtained from the following:

$$I = PD_o L_s R_s^2/(6E\eta) \qquad \text{where } \eta = 0.50$$

19.15.2 Heavy Stiffeners

19.15.2(a) Stress Limits. The yield pressure P_t including the circumferential (hoop) stress and the bending stress arising from possible out-of-roundness is calculated by satisfying the following equation:

$$\sigma_y = \frac{P_t \sigma_y}{p_{yf}} + \frac{3Ec\delta P_t}{(P_n - P_t)R^2}$$

where

$$P_{yf} = \frac{\sigma_y t R_f}{R^2[1-(\nu/2)-\gamma]}$$

$$P_n = \frac{3EI}{L_c R^3}$$

$$\gamma = \frac{A[1-(\nu/2)]}{A + t_w t + (2NtL_c/\theta)}$$

$$M = L_c/\sqrt{Rt}$$

I, δ, c, θ, N, R_f, R_s, A, etc. are the corresponding values (as defined previously) for the heavy stiffener being under consideration. The maximum allowable working pressure based on stiffener stresses is given by:

$$P_a = P_t \eta \qquad \text{where } \eta = 0.50$$

19.15.2(b) Stiffener Tripping. Paragraph 6/19.15.1(b) is likewise applicable to heavy stiffeners.

19.15.2(c) Local Buckling. Paragraph 6/19.15.1(c) is likewise applicable to heavy stiffeners.

19.15.2(d) Inertia Requirements. The moment of inertia I for the combined section consisting of the stiffener attached to the shell and the effective shell length L_e acting with it, is not to be less than that obtained from the following:

$$I = PD_oL_cR_s^2/(6E\eta) \qquad \text{where } \eta = 0.50$$

The applicable usage factor η is 0.5.

19.15.3 Remaining Stiffeners

The same assessment as above is to be followed for the remaining heavy stiffeners bounding a compartment length and non-heavy stiffeners within that compartment length.

21 Conical Shells Under External Pressure

21.1 Shell Geometry

R_1 mean radius of shell at small end of conical bay

R_2 mean radius of shell at large end of conical bay

R_b $(R_1 + R_2)/2$ or $(R_2 + R_3)/2$, etc.

R_c $(R_{H1} + R_{H2})/2$

R_{H1} mean radius of shell at heavy member of the smaller end of the conical section

R_{H2} mean radius of shell at heavy member of the larger end of the conical section

L greater of L_b or L_s

L_b unsupported spacing between stiffeners

L_c compartment length for overall instability considerations

L_s center to center spacing of stiffeners

t shell thickness

α half-apex angle of a cone

21.3 Stiffener Properties (See Notes in 6/21.7 and 6/21.15)

A_s area of stiffener cross section alone

d distance of centroid of stiffener cross section alone to the tip of stiffener outstand (away from the shell)

I moment of inertia of combined section consisting of stiffener together with an effective length of shell L_e about the centroidal axis of the combined section parallel to the axis of the cone

I_z moment of inertia of stiffener alone about the radial axis through the web

L_e effective length of conical shell acting with the stiffener

t_w thickness of stiffener web

$\bar{z}$ distance of centroid of stiffener cross section alone to the closer shell surface

21.5 General

Conical shells are to have a half-apex angle, α (see Section 6, Figure 5) not greater than 60°. Special consideration will be given to cones with a half-apex angle, α, greater than 60° when their design is not in compliance with the requirements for unstayed flat heads of Part 4, Chapter 4 of the *Steel Vessel Rules*.

The radial axis of all stiffeners is to be normal to the cone axis. Stiffened cones are to have their ends bounded by two heavy stiffeners each located as close as possible to the point of cone-to-cylinder transition (see Section 6, Figure 2).

Local stresses and stress concentrations are to be considered for cone-to-cylinder transition regions.

21.7 Inter-Stiffener Strength

21.7.1

The inter-stiffener strength of the conical shell is to be calculated for each bay using the following equation:

$$P_{co} = P_{mo}/2 \qquad \text{if } P_{mo}/P_{yo} \le 1$$

$$P_{co} = P_{yo}[1 - (P_{yo}/2P_{mo})] \qquad \text{if } 1 < P_{mo}/P_{yo} \le 3$$

$$P_{co} = \frac{5}{6}P_{yo} \qquad \text{if } P_{mo}/P_{yo} > 3$$

where

$$P_{mo} = \frac{2.42E[t\cos\alpha/(R_1+R_2)]^{5/2}}{(1-\nu^2)^{3/4}\left[\left(\frac{L}{R_1+R_2}\right) - 0.45\left(\frac{t\cos\alpha}{R_1+R_2}\right)^{1/2}\right]}$$

$$P_{yo} = \frac{\sigma_y t\cos\alpha}{R_2(1-F)}$$

$$F = \frac{A[1-(\nu/2)]G}{A + t_w t\cos\alpha + (2Nt(\cos\alpha)L/\theta)}$$

$$M = \frac{L}{\sqrt{R_b t\cos\alpha}}$$

$A = A_s(R_b/R_{se})^2$ for external framing, where $R_{se} = R_b + (t/2) + \bar{z}$

$A = A_s(R_b/R_{si})$ for internal framing, where $R_{si} = R_b - (t/2) - \bar{z}$

The maximum allowable working pressure based on inter-stiffener strength is given by:

$P_a = P_{co}\eta$ where $\eta = 0.72$

Note: For the purpose of calculating stiffener properties (I, A, etc.) for each bay, the following are to be considered in conjunction with the nomenclature already given in Subsections 6/17 and 6/21:

i) The stiffener (bounding the conical bay) with the smallest moment of inertia about its own neutral axis, taken parallel to the cone axis.

ii) The effective length of the conical shell, L_e, being parallel to the cone axis and perpendicular to the stiffener web with a magnitude equal to the smaller of $1.5\sqrt{R_b t \cos\alpha}$ or $0.75\ L_s$.

iii) The centroid of the effective shell [see ii) above] of the combined stiffener located at a radius (from the cone axis) not less than R_b of the bay under consideration. See detail in Section 6, Figure 5.

21.7.2

The limit pressure corresponding to the longitudinal stress at stiffeners reaching yield, is given by the following:

$$P_{\ell o} = \frac{2\sigma_y t \cos\alpha}{R_b}\left[1+\left(\frac{12}{1-\nu^2}\right)^{1/2}\gamma H\right]^{-1}$$

where

$$\gamma = \frac{A[1-(\nu/2)]}{A + t_w t\cos\alpha + (2Nt(\cos\alpha)L/\theta)}$$

The maximum allowable working pressure based on longitudinal stress and the frame is given by:

$$P_a = P_{\ell o}\eta \qquad \text{where } \eta = 0.67$$

21.7.3

The same assessment as in Subparagraphs 6/21.7.1 and 6/21.7.2 above is to be followed for each of the remaining bays of the cone.

21.9 Unstiffened Cones

Unstiffened cones (including unstiffened cones whose ends are bounded by heavy members, see 6/21.13) are to be assessed using the inter-stiffener strength expressions given in 6/21.7.1 considering $F = 0$. L is to be taken as the axial length of the cone (see Section 6, Figure 5). In addition, all "unstiffened-cylinder-adjacent-to-unstiffened-cone" designs without heavy members at their transitions, are to comply with the requirements of 6/19.7.

21.11 Length between Support Members

L_c is the largest spacing between two heavy stiffeners, or the heavy stiffener and the dome end, or the entire (compartment) length between ends of the vessel. In the case of dome ends, the length L_c is to include 40 percent of the height of the head. See Section 6, Figure 2.

21.13 Heavy Stiffeners

Stiffeners used for purposes of reducing the compartment length L_c within which overall buckling performance is checked are termed heavy stiffeners and are to be designed to meet the requirements for heavy stiffeners in 6/21.17.2.

21.15 Overall Buckling Strength

The limit pressure corresponding to the overall buckling mode between heavy support members is obtained from the following equation:

$$P_{no} = \left[\frac{Et\cos\alpha}{R_c}\right]A_1 + \frac{EIA_2}{LR_{H2}^3}$$

where

$$A_1 = \frac{\lambda^4}{[A_2 + (\lambda^2/2)][n^2 + \lambda^2]^2}$$

$$\lambda = \frac{\pi R_c \cos\alpha}{L_c}$$

$$A_2 = n^2 - 1$$

The number of lobes, *n,* expected at failure is a positive integer, 2 or higher (see Section 6, Figure 4), that results in the lowest P_{no}.

The maximum allowable working pressure based on overall buckling strength is given by:

$$P_a = P_{no}\eta \qquad \text{where } \eta = 0.50$$

Note: For the purpose of calculating stiffener properties for each conical section bounded by heavy members, the following are to be considered in conjunction with the nomenclature already given.

i) The stiffener (within the heavy members) with the smallest moment of inertia about its own neutral axis, taken parallel to the cone axis.

ii) The effective length of the conical shell, L_e, being parallel to the cone axis and perpendicular to the stiffener web with a magnitude equal to the smaller of $1.5\sqrt{R_c t\cos\alpha}$ or 0.75 L_s.

iii) The centroid of the effective shell [see ii) above] of the combined stiffener located at a radius (from the cone axis) not less than R_c. See detail in Section 6, Figure 5.

21.17 Stiffeners

All stiffeners are to be attached to the shell by continuous welding. Any ring stiffener welded to a conical shell is to comply with the following strength formulations relating to the maximum stress in the stiffener, stiffener tripping, local buckling of webs and flanges, and stiffener flexural inertia. These formulations apply to stiffeners whose outer flanges (where fitted) are symmetric about the web. Other geometries will be subject to special consideration.

21.17.1 Non-heavy Stiffeners

21.17.1(a) Stress Limits The yield pressure P_{to}, including the circumferential (hoop) stress and the bending stress arising from possible out-of-roundness, is calculated by satisfying the following equation for the stiffener considered in 6/21.7 for each bay.

$$\sigma_y = \frac{p_{to}\sigma_y}{p_{yfo}} + \frac{Ec\delta(n^2-1)P_{to}}{(P_{no}-P_{to})R_b^2}$$

where

n = number of overall instability lobes

P_{no} = corresponding buckling pressure as given in 6/21.15

δ = allowable out-of-roundness, $^1/_2$ percent of R_b or 0.005 R_b

The distance of the stiffener flange from the neutral axis of the combined stiffener and effective shell section L_e, is denoted "c".

P_{yfo} is calculated as follows:

$$P_{yfo} = \frac{\sigma_y t(\cos\alpha)R_{fo}}{R_b^2[1-(\nu/2)-\gamma]}$$

where

R_{fo} = $R_b + (t/2) + \bar{z} + d$ for external framing

R_{fo} = $R_b - (t/2) - \bar{z} - d$ for external framing

The maximum allowable working pressure based on stiffener stresses is given by:

P_a = $P_{to}\eta$ where $\eta = 0.50$

21.17.1(b) Stiffener Tripping. The circumferential tripping stress for flanged stiffeners attached to the shell is to be obtained as follows:

$$\sigma_T = \frac{EI_z}{A_s R_b \bar{z}}$$

The tripping stress as obtained from the above equation is to be greater than the applicable yield stress σ_y.

21.17.1(c) Local Buckling. To address the possibility of local buckling of the flanges and webs of a stiffener cross section welded to the shell, the following slenderness limits are to be met:

Item	
Flat bars, other outstands	Width/Thickness $\leq 0.3\sqrt{E/\sigma_y}$
Web of flanged stiffener	Depth/Thickness $\leq 0.9\sqrt{E/\sigma_y}$

21.17.1(d) Inertia Requirements. The moment of inertia for the combined section, consisting of a stiffener welded to the shell and the effective shell length L_e (see Note in 6/21.7) acting with it, is to be not less than I obtained from the following:

$$I = P(2R_b + t)L\,R_{so}^2/(6E\eta\cos\alpha)$$

where

R_{so} = R_{se} for external framing

R_{so} = R_{si} for internal framing

The applicable usage factor η is 0.50

21.17.1(e) Remaining Non-Heavy Stiffeners. The same assessment as 6/21.17.1(a) through 6/21.17.1(d) above is to be followed for each stiffener considered in 6/21.7 for the remaining conical bays.

21.17.2 Heavy Stiffeners

21.17.2(a) Stress Limits The yield pressure P_{to}, including the circumferential (hoop) stress and the bending stress arising from possible out-of-roundness, is calculated by satisfying the following equation for the heavy stiffener under consideration.

$$\sigma_y = \frac{P_{to}\sigma_y}{P_{yfo}} + \frac{3Ec\sigma P_{to}}{(P_{no} - P_{to})R_c^2}$$

where

$$P_{yfo} = \frac{\sigma_y t(\cos\alpha)R_{fc}}{R_c^2[1-(\nu/2)-\gamma]}$$

$$P_{no} = \frac{3EI}{L_c R_{H2}^3}$$

$R_{fc} = R_c + (t/2) + \bar{z} + d$ for external framing

$= R_c - (t/2) - \bar{z} - d$ for internal framing

$$\gamma = \frac{A[1-(\nu/2)]}{A + t_w t\cos\alpha + (2Nt(\cos\alpha)L_c/\theta)}$$

$$M = \frac{L_c}{\sqrt{R_c t\cos\alpha}}$$

$A = A_s(R_c/R_{sx})^2$ for external framing, where $R_{sx} = R_c + (t/2) + \bar{z}$

$A = A_s(R_c/R_{sn})$ for internal framing, where $R_{sn} = R_c - (t/2) - \bar{z}$

I, δ, c, z, d, θ, N, etc. are the corresponding values (as defined previously) for the heavy stiffener in the conical section under consideration.

The maximum allowable working pressure based on stiffener stresses is given by:

$P_a = P_{to}\eta$ where $\eta = 0.50$

21.17.2(b) Stiffener Tripping. Item 6/21.17.1(b) is likewise applicable to heavy stiffeners when R_b is replaced by R_c.

21.17.2(c) Local Buckling. Item 6/21.17.1(c) is likewise applicable to heavy stiffeners.

21.17.2(d) Inertia Requirements. The moment of inertia I for the combined section, consisting of the stiffener attached to the shell and the effective shell length L_e (see Note in 6/21.15) acting with it, is not to be less than that obtained from the following:

$$I = P(2R_c + t)L_c R_{sc}^2/(6E\eta\cos\alpha)$$

where

$R_{sc} = R_{sx}$ for external framing

$R_{sc} = R_{sn}$ for internal framing

The applicable usage factor η is 0.50

21.17.2(e) Transitions. Heavy stiffeners located at cylinder-to-cone transitions are to be in compliance with both 6/19.15.2 and 6/21.17.2.

21.17.3 Remaining Stiffeners

The same assessment as above is to be followed for the remaining heavy stiffeners bounding a compartment length and non-heavy stiffeners within that compartment length.

23 Spherical Shells Under External Pressure

23.1 Shell Geometry

D mean diameter

D_i inner diameter

D_o outer diameter

R_o outer radius

t shell thickness

23.3 General

The limit pressure for spherical shells is to be obtained from the following equation:

$$\frac{P_{cs}}{P_{ys}} = 0.7391[1 + (P_{ys}/(0.3P_{es}))^2]^{-1/2} \qquad \text{for } P_{es}/P_{ys} > 1$$

$$\frac{P_{cs}}{P_{ys}} = 0.2124P_{es}/P_{ys} \qquad \text{for } P_{es}/P_{ys} \le 1$$

where

P_{ys} = $2\sigma_y t/R_o$

R_o = the nominal outside radius of the spherical shell

P_{es} = $(2/\sqrt{3(1-\nu^2)})E(t/R_o)^2$

The maximum allowable working pressure is given by:

P_a = $P_{cs}\eta$ where $\eta = 0.67$

23.5 Hemispherical Dished Heads

For hemispherical dished heads, the maximum allowable working pressure is to be determined as for spherical shells, using the hemisphere external radius R_o. The applicable usage factor, η is to be taken as 0.67.

23.7 Ellipsoidal Heads

For ellipsoidal heads, the maximum allowable working pressure is to be obtained as for spherical shells, using an equivalent spherical radius R_e substituted for R_o, related to the maximum radius of the crown, and given by the following:

$$R_e = D_o D_i / 4h$$

where

D_i = inner diameter

h = head inside depth, measured along the tangent line (i.e. head bend line)

D_o = shell outer diameter (see Section 6, Figure 6)

The applicable usage factor, η is to be taken as 0.67.

23.9 Torispherical Heads

The maximum allowable working pressure for torispherical heads is to be obtained as for spherical shells, using a spherical radius R_o equal to the dished crown radius of the head, measured to shell outer surface. (See Section 6, Figure 6.) The applicable usage factor η is to be taken as 0.67.

23.11 Shape Limitations

The thickness of hemispherical heads is to be such that $0.0002\ D \le t \le 0.16D$, where D is the mean diameter. Shape limits for ellipsoidal and torispherical heads are shown below. (See Section 6, Figure 6.)

Ellipsoidal:	$0.0002D \le t$	$\le 0.80D$
	h	$\ge 0.18D$
	ℓ_h	$\ge 2t$
Torispherical:	$0.0002D \le t$	$\le 0.80D$
	h	$\ge 0.18D$
	ℓ_h	$\ge 2t$
	r	$\ge 0.06D$
	r	$\ge 2t$
	R	$\le D$

25 Exostructure

Exostructures are to be of adequate construction, consideration being given to their size and the loads which may be imposed upon them. Loads to be considered include those which result from bottoming, striking objects, wave slap, bumping alongside the tender, and other loads resulting from being recovered in sea state 6 (see Appendix 4, Table 1). A lesser sea state may be considered when it is intended that the unit be operated with a launch and recovery system whose design parameters are less than sea state 6. Stress is not to exceed the allowable stress f_a as obtained from the following equation:

$$f_a = f\eta_e$$

where

f = the critical or shear stress for buckling considerations, or

= minimum specified material yield stress

η_e = usage factor as follows:

Type of Stress	η_e
Compressive or shear buckling	0.8
Axial and/or bending stresses	0.8
Shear stresses	0.53

FIGURE 1
Illustrative Hull Components

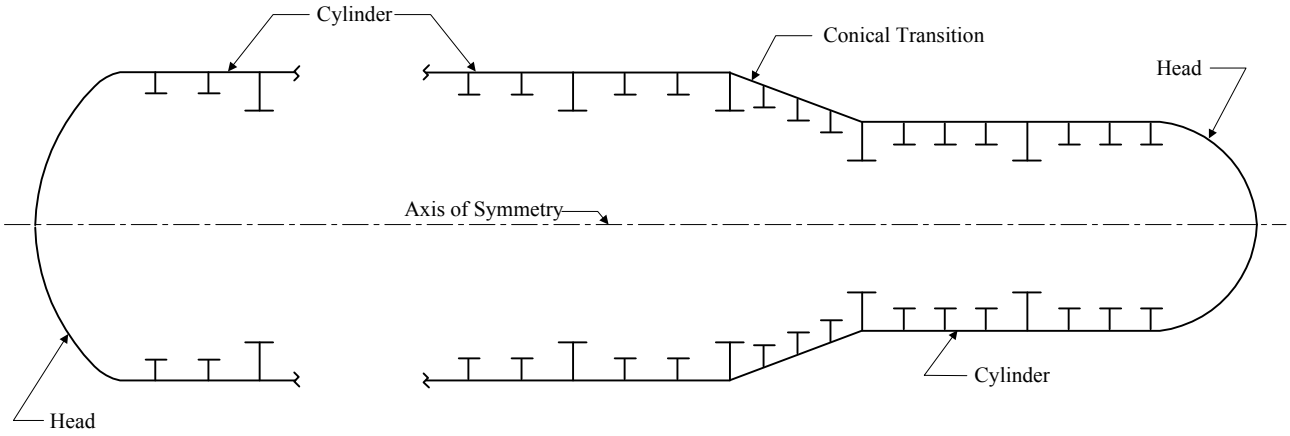

FIGURE 2
Definitions – Compartment Length

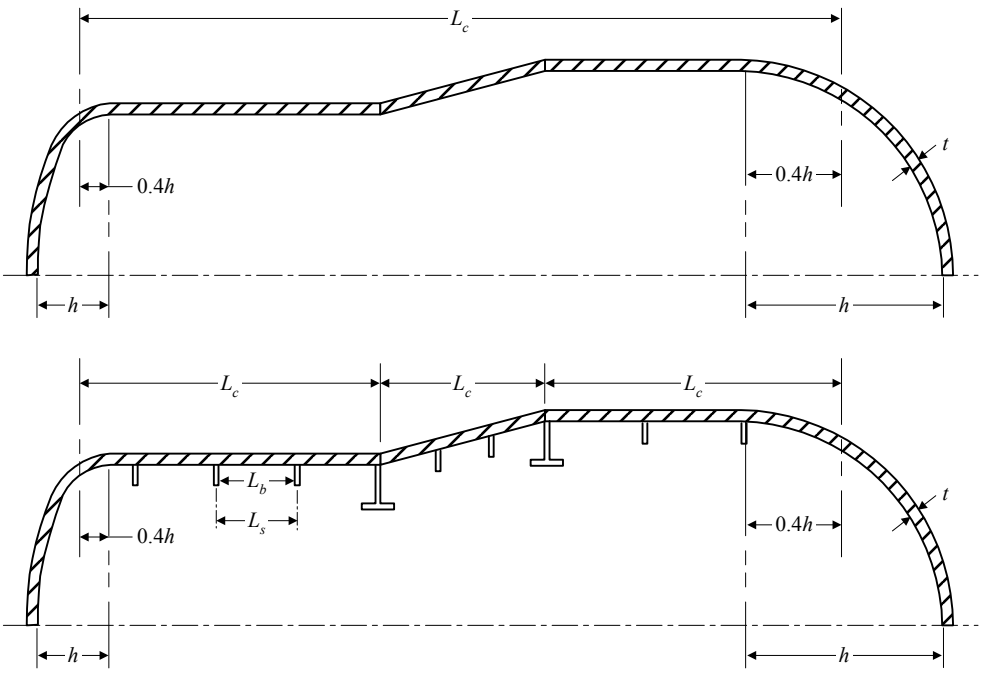

FIGURE 3
Definitions

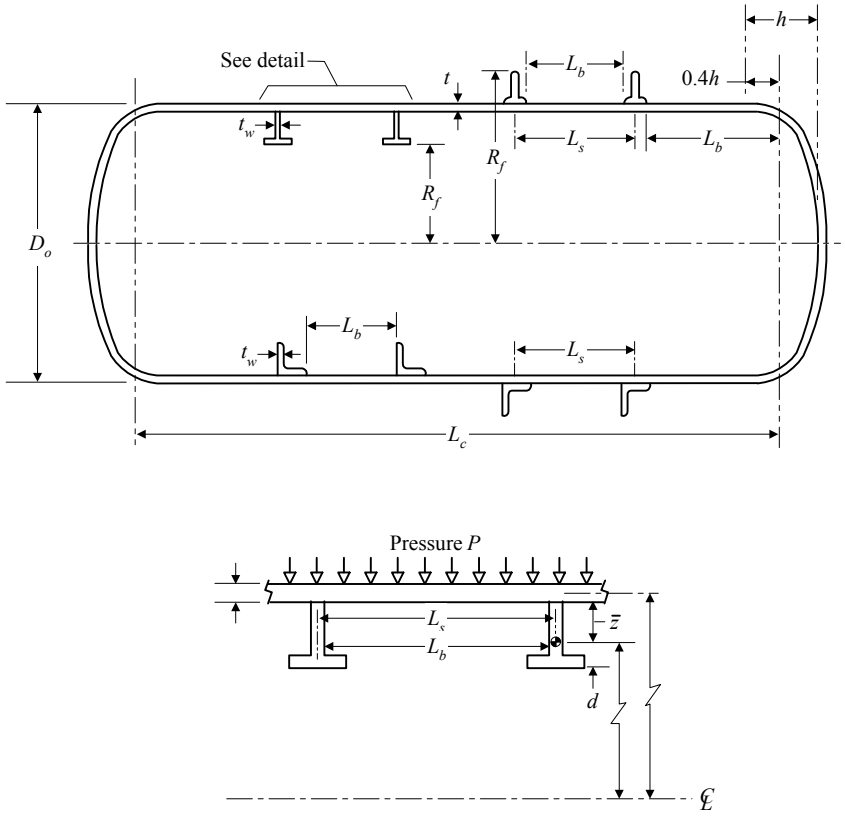

FIGURE 4
Overall Buckling Strength – Lobes Expected at Failure

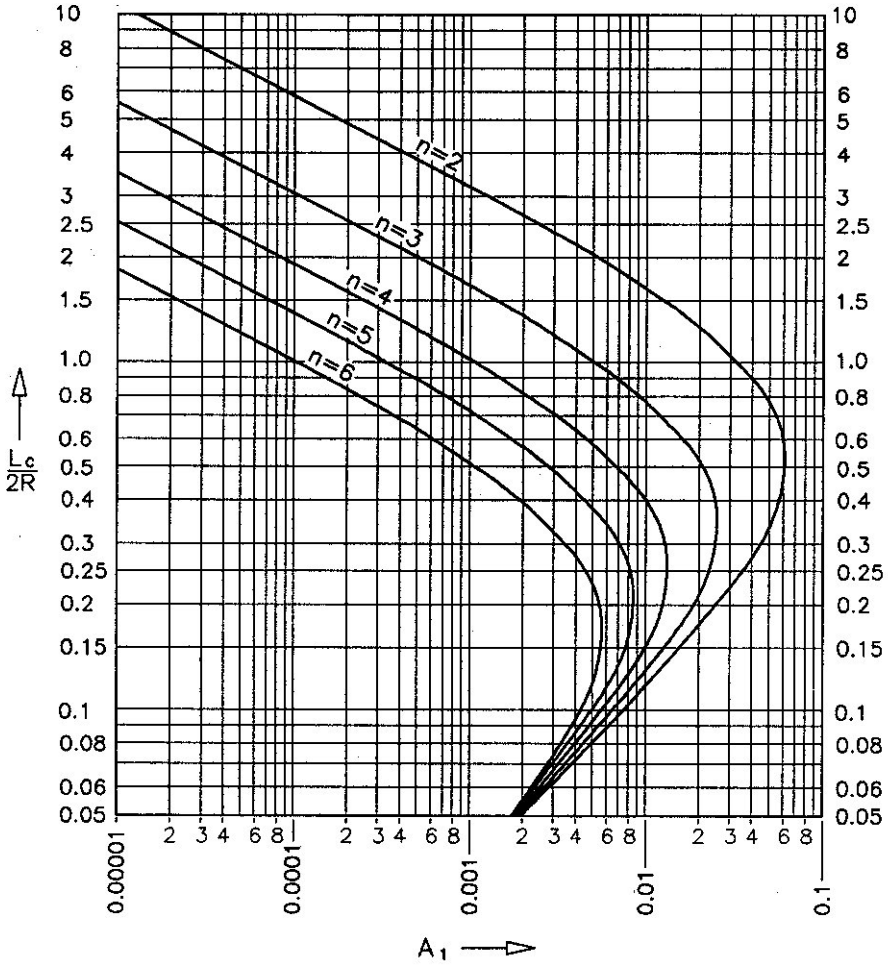

FIGURE 5
Definitions – Cones

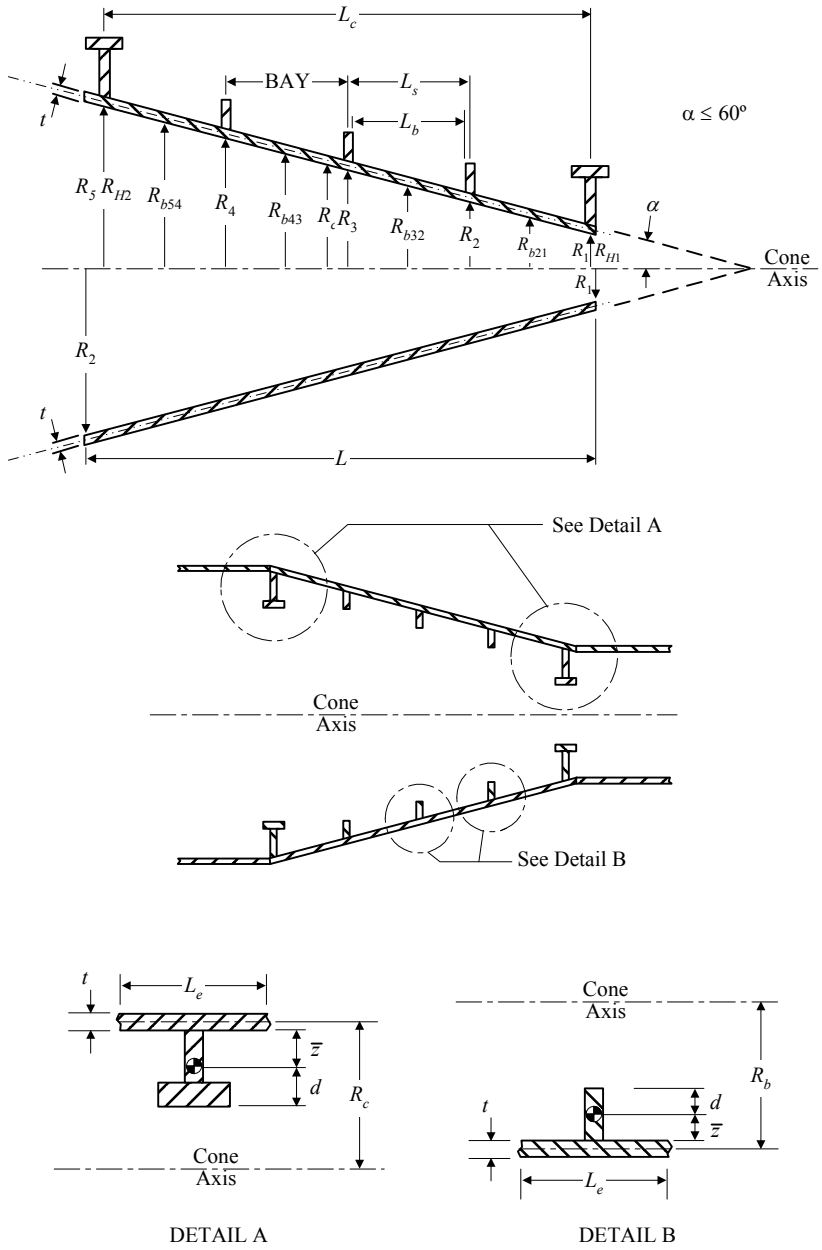

DETAIL A DETAIL B

FIGURE 6
Definitions – Heads

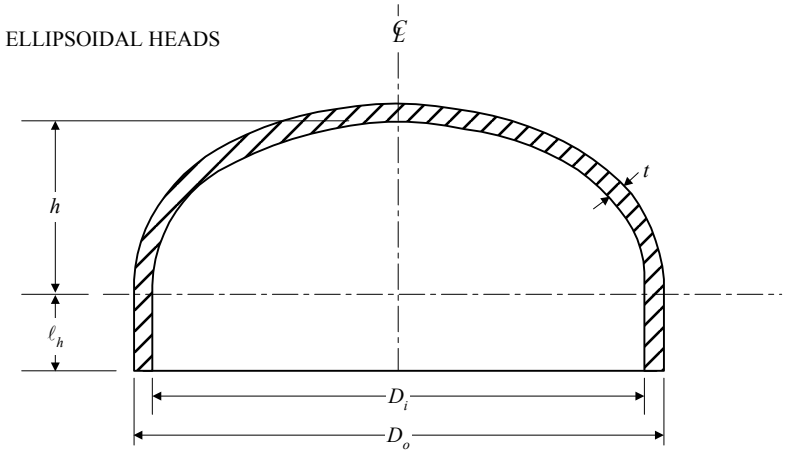

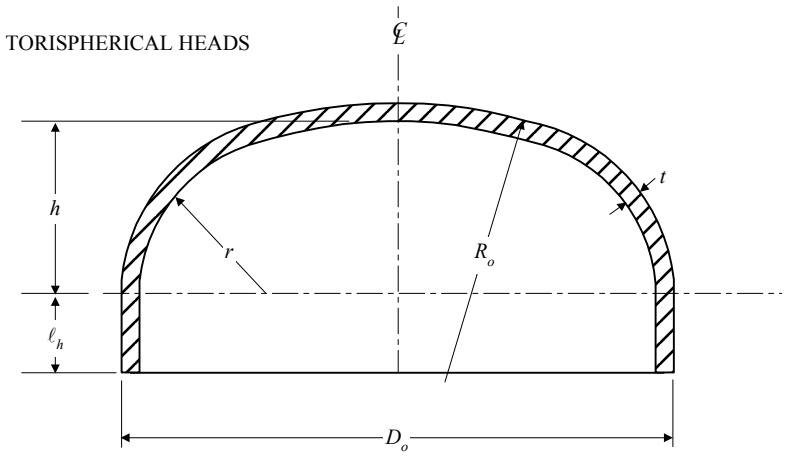

SECTION 7 Windows and Viewports

1 General

1.1

Windows and window installation are to comply with the latest edition, including addenda, of the ASME PVHO-1 Safety Standard for Pressure Vessels for Human Occupancy (ASME PVHO-1).

1.3

Window retaining rings, bolts and seat dimensions in viewport flanges, are to comply with the latest edition of ASME PVHO-1.

3 Definitions *(2002)*

3.1 Design Life

The *Design Life* of an acrylic window is the length of time defined by Section 2-2.7 of ASME PVHO-1 for an acrylic window of a particular geometry and meeting the requirements of the PVHO-1 standard.

3.3 Service Life *(2009)*

The *Service Life* of an acrylic window is the maximum length of time and/or number of cycles that an acrylic window may be used in a pressure vessel for human occupancy.

3.5 Viewport Assembly

A *Viewport Assembly* is a pressure vessel penetration consisting of a window, flange, retaining rings and seals.

3.7 Window

A *Window* is the transparent, impermeable and pressure resistant insert in a viewport.

5 Submission of Drawings and Data

Detailed dimensional drawings of viewport components, material specifications including materials for flanges, retaining rings, gaskets and bolts, and design calculations demonstrating compliance with these Rules, are to be submitted for review.

7 Design Parameters and Operating Conditions *(2009)*

The windows of underwater vehicles and hyperbaric installations are subject to the design parameters contained in the latest edition of ASME PVHO-1. The design parameters below are based on ASME PVHO-1-2007. It is the responsibility of the designer to determine that these requirements are consistent with the latest edition of the ASME PVHO-1 safety standard.

i) The operating temperature is to be within a -18°C to 66°C (0°F to 150°F) temperature range.

ii) The pressurization or depressurization rate is to be less than 10 bar/s (145 psi/s).

iii) The contained fluid (external or internal) is to be only water, seawater, air, or breathing gases.

iv) The number, or the total duration, of pressure cycles during the operational life of the windows is not to exceed 10,000 cycles or 40,000 hr, respectively.

v) The maximum operational pressure is not to exceed 1380 bar (20,000 psi)

vi) The exposure to nuclear radiation shall not exceed 4 megarads

vii) The design life of the windows is to be in accordance with the following:

- Not to exceed 20 years for windows that are exposed only to compressive stresses
- Not to exceed 10 years for all windows subject to tensile stresses.

The design life of a window is counted from the date of fabrication, regardless of the effective length of time during which the window has been used.

Design parameters different from the above will be subject to special consideration.

9 Certification *(2009)*

Copies of the following certifications are to be submitted for each window:

9.1 Design Certification

A design certification is to be provided for each window and viewport assembly design. This document is to certify that the design complies with ASME PVHO-1. The certificate is to include the information required by Form VP-2 in Section 2 of ASME PVHO-1.

9.3 Material Manufacturer's Certification

The manufacturer of the acrylic material is to provide a document certifying that the material complies with ASME PVHO-1. The Acrylic material is to be marked so as to be traceable to this certificate. The certificate is to include the information required by Form VP-3 in Section 2 of ASME PVHO-1.

9.5 Material Testing Certification

After annealing, material acceptance tests are to be performed by the material manufacturer or by an independent testing laboratory. The material acceptance tests are to be documented by a certificate that includes the information required by Form VP-4 in Section 2 of ASME PVHO-1.

9.7 Pressure Testing Certification

Window pressure testing in accordance with Subsection 7/19 is to be documented by a certificate. The certificate is to include the information required by Form VP-5 in Section 2 of ASME PVHO-1.

9.9 Fabrication Certification

The window fabricator is to provide an overall window certification confirming that the window was fabricated in compliance with these Rules and ASME PVHO-1. The certificate is to provide traceability of the window through all stages of manufacture and fabrication and is to include the information required by Form VP-1 in Section 2 of ASME PVHO-1.

11 Viewport Flanges

Viewport flanges are to be designed to meet the reinforcement and strength requirements in Section 6. Viewport flange materials are to comply with the requirements in Section 4.

Because of the difference between the moduli of elasticity of metals and of polymethyl methacrylate, it is to be assumed in reinforcement calculations for the window opening that the acrylic window does not provide reinforcement of the pressure hull.

13 Dimensional Tolerances

Dimensional tolerances and surface finish are to be submitted for review.

15 Window Fabrication

Fabrication of windows is to be in accordance with ASME PVHO-1 and is to be carried out under an approved quality assurance program.

ABS Surveyor's attendance at the shop of the fabricator is required during fabrication and testing to verify that these processes are conducted in accordance with the approved program.

15.1

Windows are to be fabricated from cast polymethyl methacrylate per ASME PVHO-1.

15.3

Each window is to be annealed after all forming, machining, repairs and polishing processes have been completed. The annealing procedures are to be in accordance with the acrylic manufacturer's recommendations. A copy of the time/temperature chart for the final window anneal is to be attached to the certification required in 7/9.9.

15.5

Windows are to be fabricated from material tested in the presence of the Surveyor to show compliance with ASME PVHO-1. The certificate required in 7/9.5 documents these minimum material properties.

15.7

Dimensional checks of all windows are to be carried out in the presence of the Surveyor after all fabrication processes are completed.

17 Installation of Windows

17.1

Before installation of the window in the seat cavity, the seat cavity must be suitably cleaned with material compatible with the acrylic plastic.

17.3

After installation the window is to be checked in order to determine that the bolts in the retaining ring have been tightened with the same bolt torque.

17.5

Conical window seats are to be coated with silicon grease or other suitable grease prior to installation of the window.

19 Pressure Testing *(2009)*

19.1

Each window is to be pressure tested in the presence of and to the satisfaction of the Surveyor at least once prior to being accepted for service. The pressure test shall take place with the window installed in the viewport (see also Subsection 3/13), or in a test fixture whose window seat dimensions, retaining ring, and seals are identical to those of the chamber. If the window is tested in a test fixture, details of the test fixture are to be submitted.

19.3

The window shall be pressurized with gas or water until design pressure is reached. The design pressure shall be maintained for a minimum of 1, but not more than 4, hours followed by depressurization at a maximum rate not to exceed 4.5 MPa/min (650 psi/min).

19.5

The temperature of the pressurizing medium during the test shall be the design temperature for which the window is rated with a tolerance of +0°/–2.5°C (+0°/–5°F). Brief deviations from above temperature tolerances are allowed, providing that the deviation does not exceed 5.5°C (10°F) and lasts less than 10 min.

19.7

Windows that leak during the pressure tests shall be removed, fitted with new seals, and retested. If, during the retest, the leakage continues, efforts will be made to complete the test by stopping the leak with a temporary seal. The inability of seals to operate properly during the test shall be noted in the test report, which shall be submitted at the conclusion of the pressure test to the chamber manufacturer/user.

19.9

At conclusion of the pressure test, the windows are to be visually inspected for the presence of crazing, cracks or permanent deformation. This examination may be performed without removal of the window from the chamber.

19.11

Presence of crazing, cracks or permanent deformation visible with the unaided eye (except for correction necessary to achieve 20/20 vision) shall be the cause of rejection of the windows and shall be so noted on the test report. Permanent deformation less than $0.001D_i$ in magnitude measured at the center of the window shall not be cause for rejection.

19.13 *(2009)*

A hydrostatic or pneumatic test in excess of design pressure may be substituted for the tests specified in 7/19.3 and 7/19.5 for windows with a design temperature of 52°C (125°F) or less. During the hydrostatic or pneumatic test, the pressure shall be maintained for a minimum of 1, but not more than 4, hours. The test pressure shall not exceed 1.5 times the design pressure or 138 MPa (20,000 psi), whichever is the lesser value. To prevent permanent deformation of windows tested above design pressure, the temperature of the pressurizing medium during the test shall be at least 14°C (25°F) lower than the design temperature. For windows with a 10°C (50°F) design temperature, the temperature of the pressurizing medium during the test shall be 0°C to 4°C (32°F to 40°F). All the other requirements of the mandatory pressure test specified in Paragraphs 7/19.7, 7/19.9 and 7/19.11 remain applicable.

21 Marking

Windows complying with these requirements and those of ASME PVHO-1 and tested in the presence of the Surveyor are to be identified with the markings required by ASME PVHO-1 preceded by the symbols ✠ **AB**. Markings are to be oriented so that they can be read from the high pressure side. Required forms and enclosures are to be issued for each window in accordance with ASME PVHO-1.

Windows fabricated under an ABS approved quality assurance program are to be marked as required by ASME PVHO-1 preceded by the symbols ✠ **AB**, but need not be marked with the letters "PVHO".

23 Window Repairs

Repairs of new or used windows will be subject to special considerations.

This Page Intentionally Left Blank

SECTION 8 Life Support and Environmental Control Systems

1 General

Life support systems are to be constructed, installed, and tested to the satisfaction of the Surveyor in accordance with these Rules. In addition to complying with this Section, mechanical, electrical and emergency systems are to comply with Sections 9, 10 and 11 as applicable.

3 Plans and Data to be Submitted

Plans and calculations for the following systems, as applicable, are to be submitted for review and approval. Plans are to include general arrangement and detail drawings; calculations are to address piping systems, gas mixtures, system capacity, etc. (See also Subsection 1/7)

- Breathing gas systems
- Air and gas storage systems
- Carbon dioxide removal systems
- Emergency life support systems
- Life support instrumentation
- Temperature control; heating and cooling
- Other life support features essential for safe operation (such as catalytic burners for carbon monoxide)

5 Design Principles

5.1 General *(2009)*

All units are to be provided with equipment to generate, monitor and maintain suitable life support conditions inside the living compartment.

One atmosphere chambers/systems are to be designed so that the concentration of O_2 (oxygen) will be kept within the limits of 18.0 to 23.0 percent by volume and the concentration of CO_2 (carbon dioxide) will never exceed 0.5 percent by volume.

Hyperbaric chambers/systems are to be designed so that the partial pressure of O_2 is kept within the appropriate limits for the particular application (mixed gas diving, saturation diving, etc.) as specified in the US Navy Diving Manual or an equivalent recognized national or international standard. The partial pressure of CO_2 is not to exceed 0.005 atmosphere absolute (ata) for all applications.

Systems are to be such that adequate quantities of gases for operation at the maximum pressure for normal and emergency conditions are provided. For hyperbaric chambers/systems, a sufficient supply of gases essential for the desaturation (or decompression) period in accordance with the applicable decompression table is to be kept available for the expected maximum number of personnel.

5.3 Standard Person *(2009)*

The following table is provided as a reference for performing life support calculations.

Item		*Quantity*	*Units (per person)*
Oxygen (O_2) Consumption		0.038 (0.083)	kg (lbs.) per hour at 1 atm
Drinking Water		2.72 (6)	kg (lbs.) per day
Food, Dry		0.64 (1.4)	kg (lbs.) per day
Carbon Dioxide (CO_2) Produced		0.0523 (0.115)	kg (lbs.) per hour at 1 atm
Water Vapor Produced		1.81 (4)	kg (lbs.) per day
Urine		1.81 (4)	kg (lbs.) per day
Feces		0.18 (0.4)	kg (lbs.) per day
Flatus		0.1	cu. ft. per day
Heat Output	Sensible	250	BTU per hour
	Latent	220	BTU per hour

5.5 Fire Hazard *(2007)*

The design of any system that controls, manually or automatically, the percentage of oxygen in the atmosphere of the personnel compartment, is to consider the increased fire hazard as the volume concentration of oxygen starts exceeding 21 percent by volume. All materials in the personnel compartment (paints, lubricants, adhesives, furniture coverings, etc.) are to be investigated for combustibility. The evaluation is to consider at least the rate of combustion, quantity of material, exposed surface area and proximity to heat sources. See Subsection 3/1.5.

7 Breathing Gas

7.1 Oxygen Supply *(2009)*

Oxygen supply systems are to be capable of supplying oxygen at the rate of 0.038 kg (0.083 lbs) per hour per person at 1 atmosphere.

7.3 Closed Breathing Gas Circuits

The use of closed breathing circuits with gas reclaim systems will be subject to special consideration.

7.5 Breathing Gas Storage

7.5.1 Compressed Storage

Gas is to be stored in accordance with CGA Regulations or any other recognized standard.

7.5.2 Container Location

The volume of a single internal source is to be limited such that complete release of its contents will not increase the pressure more than 1 atm nor raise the oxygen level above 23 percent by volume. This can be demonstrated by calculations. If the calculated pressure rise is more than 1 atm or the increase of oxygen concentration is above 23 percent by volume, then the container is to be stored outside the manned compartment.

7.7 Fresh Air *(2002)*

7.7.1

Ventilation of a vehicle on surface may be achieved via an air duct arranged to prevent admission of spray water.

7.7.2

When the battery compartment is located inside the vehicle, a fan or similar device is to be provided for positive ventilation of the compartment during charging and for a suitable time before and after charging. Fans are to be of non-sparking construction and the ventilation system is to provide thirty (30) air changes per hour. The venting of the battery compartment is to be separate from any other ventilation system. If the fan becomes inoperable, then charging of the batteries is to be automatically discontinued.

7.7.3

Battery compartments located inside the vehicle and containing batteries charged by a device having an output of 200 watts or less, arranged so as to prevent driving the batteries to their gassing potential, may be provided with natural ventilation provided the ventilation opening(s) are located at the highest point(s) in the compartment and have an aggregate area equal to the volume of the compartment divided by 30 inches.

7.7.4

Habitats and working chambers, etc. are to be provided with means to remove, prior to a mission, any potentially explosive or toxic gas mixtures which may develop.

9 Carbon Dioxide (CO_2) Removal Systems

9.1 Capacity *(2009)*

CO_2 removal systems are to be provided and are to be capable of maintaining the CO_2 concentration at or below 0.5 percent by volume referenced to standard temperature and pressure [a CO_2 mass of 0.00989 kg/m^3 at 1 atmosphere and 0°C (0.000572 lbm/ft^3 at 1 atmosphere and 70°F)] or 0.005 ata. Systems are to be designed based upon an assumed CO_2 production rate of 0.0523 kg (0.115 lbs.) per hour per person at 1 atmosphere. Design calculations are to take into account temperature, humidity, CO_2 density at rated depth, absorption efficiency, and flow rate. See also Subsection 11/5.

9.3 Expendable Methods

9.3.1 Solid Reagents

Solid absorbents are to be granular and low dusting (particle sizes usually in the 4 to 20 mesh range). Solid reagents are to be stored in containers free of moisture.

9.3.2 Liquid Reagents

LiOH removal systems are to be located to prevent drippings from falling on crew members, the structure, or equipment. LiOH canisters or panels are to be replaceable as complete units. Proper heating is to be provided to maintain the temperature of canisters containing other alkaline hydroxides at or above 15°C (60°F).

9.5 Regenerable Reagents

9.5.1 Solid Reagents

A solid reagent capable of removing carbon dioxide from a gas stream, and which can be regenerated will be considered acceptable, provided the entering gas stream is free of organics and moisture and a suitable means of disposing of the CO_2 is provided. Solid reagents are to be stored in containers free of moisture.

9.5.2 Liquid Reagents

Liquid scrubbing systems using aqueous solution capable of removing carbon dioxide from a gas stream, and which can be regenerated, are to be provided with means to assure that the entering gas stream is free of organics and moisture. Suitable means of disposing of the CO_2 are to be provided.

9.7 Other Means of CO_2 Removal

The use of means other than those in 8/9.3 and 8/9.5 will be subject to review of supporting data demonstrating satisfactory performance under the intended service conditions.

9.9 Materials

Corrosion resistant non-toxic materials are to be used in the construction of CO_2 removal systems. Materials are to be compatible with the CO_2 removal agent.

9.11 Canister Replacement

Canisters are to be designed for ease of replacement by the crew without the need for special tools.

9.13 Testing

A system of a design that has not previously demonstrated performance under the design conditions specified in 8/9.1 and for the design mission time is to be tested to satisfactorily demonstrate such performance.

11 Reserve Life Support Capacity *(2002)*

At the commencement of a dive, the breathing gas supply and CO_2 removal systems are to have sufficient capacity for the anticipated mission time plus a reserve capacity as required below. The breathing gas supply system reserve time is to be based on the requirements in Subsection 8/7; the CO_2 removal system reserve time is to be based on the requirements in Subsection 8/9.

11.1 Untethered Units

Each submersible or other untethered unit is to have a minimum reserve capacity consistent with the emergency rescue plan but not less than 72 hours.

11.3 Tethered Units

Tethered units which carry their own normal breathing gas supply are to be provided with a normal breathing gas supply sufficient for the design mission time plus a minimum of ten percent of the design mission time but not less than an eight-hour reserve.

12 Reduced Reserve Life Support *(2007)*

Reserve life support is to be in accordance with Subsection 8/11, except that the minimum reserve in 8/11.1 may be reduced to a minimum reserve of 24 hours for units complying with this section and meeting the following requirements.

12.1

The unit is used at one of a finite number of sites, each of which is described in the approved Operations Manual, and the site selected for each dive is recorded in a shore-based log prior to the dive. The maximum bottom depth at the site must not exceed the depth that can be safely reached by SCUBA divers. In addition, maximum depth may be limited per 8/12.15 below or by emergency procedures in the Operations Manual (see 1/9.1).

12.3

The subsurface locating device required as per Subsection 3/7 is to be a device that will enable divers to quickly locate the position of the unit in emergencies.

12.5

The unit's surface support vessel can be reached by shore-based divers within one hour. At the end of the one hour period, the divers should have reached the unit's surface support vessel and be ready to make a dive with their diving gear.

12.7

The unit is equipped with *two* separate ballast systems and a jettisonable weight.

12.9

At least one of the ballast systems in 8/12.7 above is designed such that divers may manually blow a sufficient number of tanks to achieve positive buoyancy sufficient to safely evacuate passengers and crew as specified in the dive plan.

12.11

Design features and/or procedures intended to implement 8/12.1 through 8/12.9 above are to be submitted to the technical office for approval prior to implementation of a minimum reserve capacity less than that specified in 8/11.1.

12.13

Prior to approval of the design features and/or procedures referenced in 8/12.11 above, performance of a simulated rescue may be required at the discretion of the technical office or the attending Surveyor. This test may be conducted at a depth less than the design depth.

12.15

This provision requires preparation and maintenance of a dive plan, including a decompression schedule, for use in the event of an emergency. The dive plan is to consider the emergency procedures included in the Operations Manual (see 8/12.1 above) and be appropriate for the worst-case conditions at the dive site in which the submersible will be operated. The plan is to include the number of divers required, their qualifications and certifications and the required equipment. The dive plan is to clearly address the method by which the divers will be able to quickly locate the unit in emergencies. Rescue drills are to be performed on a suitable schedule to insure that a realistic estimate of bottom time is used in the plan.

12.17

A life support duration less than that required in 8/11.1 is to be documented in the *Record*.

13 Emergency Life Support System

In addition to the normal breathing gas and CO_2 removal systems, an emergency life support system is to be provided. The emergency life support system is to be independent of any surface support systems and independent of the normal life support systems. Where open circuit systems are used, the effects of increased compartment pressure are to be considered.

13.1 Masks

Emergency breathing gas is to be supplied to either full-face masks, oral-nasal masks or self-contained rebreathers suitable for the intended service. One mask per person is to be provided.

13.3 CO_2 *(2009)*

The system is to be designed such that CO_2 levels in the gas being breathed do not exceed 1.5 percent by volume referenced to standard temperature and pressure [a CO_2 mass of 0.0297 kg/m^3 at 1 atmosphere and 0°C (0.00185 lbm/ft^3 at 1 atmosphere and 70°F)] or 0.015 ata.

13.5 Duration

13.5.1 Untethered Submersible Units

150 percent of the time normally required to reach the surface from rated depth, but not less than two hours.

13.5.2 Diving Bells, Personnel Capsules and Other Tethered Units

6 hours for units which are part of a diving system or complex having two independent lifting means (each capable of raising the unit to the surface) complying with the requirements of Appendix 4; 12 hours for other units.

13.5.3 Surface Hyperbaric Chambers

Sufficient life support for the safe conclusion of a mission, except for units which are part of a system or complex having available at all times an emergency chamber (with at least similar capabilities of and a life support system independent from the unit of concern) the duration may be reduced to twice the time required for the safe transfer of the divers.

14 Personnel Protection *(2007)*

For units demonstrating compliance with the requirements below, the emergency life support system required in Subsection 8/13 may be replaced by individual devices, one per person, that provides protection from inhalation of hazardous products of combustion including carbon monoxide (CO). Protective devices intended for such use are to be submitted for review; device approval is on a case-by-case basis. Crewmembers' emergency life support is to meet the requirements in Subsection 8/13.

14.1

The submersible unit must be able to surface from rated depth and open the hatch(es) within a time period such that the oxygen level within the personnel compartment does not fall below 18 percent by volume referenced to standard temperature and pressure, with the oxygen supply turned off and with full occupancy. Additionally, the carbon dioxide concentration is not to exceed 1 percent by volume with the scrubber turned off.

14.3

The time period described in 8/14.1 above is not to exceed the lesser of 15 minutes or 80 percent of the manufacturer's rating for the individual breathing device.

15 Distribution Piping

15.1 Materials

Material specifications and details of piping systems are to be submitted for review. Piping, tubing, and hoses are to have a burst strength of at least four times the maximum allowable working pressure (MAWP).

15.1.1

Systems are to be of nickel-copper alloy (Monel), 304 or 316 stainless steel, copper, aluminum bronze (except those alloys subject to dealuminification), copper nickel, brass (except those alloys subject to dezincification), or C-69100 copper alloy.

15.1.2

SAE 100-R3 may be used.

15.1.3

Fire retardant non-metallic armored hose may be accepted for use up to 350 kg/cm^2 (5000 psi) based on evidence of satisfactory in-service experience and test data in association with the requirements of Section 10 of these Rules.

15.1.4

Other suitable materials will be specially considered.

15.3 Fittings

Materials for fittings are to comply with 8/15.1.1. Fittings are to be one of the following.

i) Flared, flareless, and compression fittings of the non-bite type

ii) Screwed fittings

iii) Brazed fittings

iv) Welded fittings

v) Flanged fittings

vi) Other special purpose fittings will be considered

15.5 Valves

Valves are to have the manufacturer's guarantee that they are suitable for service with the gas at the system's maximum allowable working pressure (MAWP) and are to have a burst strength of at least four times the MAWP.

15.5.1

Valves are to be of materials specified in 8/15.1.1.

15.5.2 *(2002)*

Control valves used in oxygen systems operating at pressures exceeding 125 psig are to be of the slow-opening type, such as needle valves.

15.5.3

Flow control valves are to provide smooth flow transition from full open to full closed.

15.7 Supply Piping *(2009)*

15.7.1

Each independent gas supply line is to be equipped with a supply pressure gauge and a shut-off valve downstream of the supply pressure gauge connection. A block valve, located such that it is capable of being monitored during operation, is to be installed between the supply line and the supply pressure gauge to permit isolating the pressure gauge.

15.7.2

The shut-off valve on a gas supply line must be accessible is to be located such that release of the volume contained in the downstream piping will not increase the internal pressure more than 1 atm.

15.7.3

Supply lines are to be secured in place to prevent movement.

15.7.4

Teflon (PTFE) tape type thread sealant is not to be used in piping systems incorporating pressure relief valves.

15.7.5

See also 10/7.21.

15.9 Pressurized Oxygen Supply Piping *(2002)*

15.9.1

The primary shut-off valve, or the final shut-off valve where accessible, on an oxygen supply line is to be located such that release of the volume contained in the downstream piping does not permit the oxygen concentration to exceed the maximum permitted in 8/21.1. Oxygen supply piping is to meet the requirements of 8/15.7.

15.9.2

Both lubricants and sealants used in potentially pressurized oxygen piping systems are to be compatible with oxygen at the maximum system supply pressure.

15.11 Supply External to the Main Hull for Untethered Units *(2002)*

When pressure containers for oxygen supply are stored outside the pressure hull there are to be at least two banks with separate penetrations entering the craft. These penetrations should be positioned such as to minimize the possibility that a single incident would cause failure of both penetrators.

15.13 Color Coding

Piping systems are to be clearly color coded in accordance with a recognized national or international color code to indicate the fluid transported (see Section 10).

17 Umbilicals

Umbilical hoses are to have a burst pressure at least 4 times system working pressure and be rated for not less than the system pressure. Additionally, umbilical hoses are to be rated for not less than the pressure equivalent of the design depth of the unit plus 28 kg/cm^2 (400 lb/in^2). Hoses are to be kink-resistant or arranged to resist kinking and have connectors that are corrosion-resistant, resistant to accidental disengagement, and rated at least equal to the rating of the hose. Umbilical hoses are to be arranged so that the weight of the assembly is borne by the strength member where the umbilical is considered to be a secondary means of recovering the bell. Umbilical hoses and fittings are to be tested to 1.5 times the system's pressure in the presence of a Surveyor.

19 Life Support Instrumentation

19.1 Monitored Parameters

The following items are to be monitored.

- Oxygen content of breathing atmospheres
- Carbon dioxide content of breathing atmospheres
- Internal and external pressure
- Compartment temperature in saturation systems
- Relative humidity in saturation systems
- Carbon monoxide when reclaimed gas is used
- Methane when reclaimed gas is used

19.3 Monitoring Equipment *(2007)*

Life support instrumentation systems, including power supplies, are to be provided in duplicate or an alternative means of measurement is to be provided. Changes in temperature, humidity and total pressure are not to affect the accuracy of measurements. Electronic life support instrumentation is to incorporate provisions for calibration.

Internal pressure is to be monitored using a mechanical type instrument in addition to any other type of pressure indicating instrument

19.5 Display Locations

Partial pressures of breathing gases are to be continuously monitored at the pilot stand and at the control station.

21 Controls

21.1 General

Means are to be provided for maintaining the oxygen content of the interior atmosphere below 23 percent by volume. Controls may be manual or automatic however; manual back-up is to be provided for automatic controls.

21.3 Manual Controls

As a minimum manual systems are to consist of a cylinder shut-off valve, a manual flow control valve, a means of regulating pressure, and a manual bypass of any installed regulator.

21.5 Automatic Controls

Automatic controls are to maintain the required partial pressures and concentration of breathable gases. Failure of the automatic control is to be indicated by audible alarms at the pilot stand or control station and the manual back-up system is to be available for immediate use.

23 Diving Temperature and Humidity Controls

23.1 Heating and Cooling

Means are to be provided for thermal insulation and temperature control during all stages of a mission. The high thermal conductivity of gases such as helium is to be considered.

23.3 Humidity

Provisions are to be made to permit control of humidity in the cabin during all phases of operation. A control range of 50 percent ± 20 percent relative humidity is recommended.

23.5 Electric Water Heaters

Electric water heaters are to comply with Section 11 and be provided with the following.

23.5.1

A high temperature cut-out in addition to the unit's normal thermostat. The cut-out is to disconnect all ungrounded conductors, is to be installed to sense maximum water temperature, is to operate at or below 99°C (210°F), and is to be either a trip-free, manually reset type or a type having a replacement element. A thermometer is to be provided capable of indicating a temperature up to the steam saturation temperature at design pressure of the heater.

23.5.2

A pressure relief device which will prevent a pressure rise of more than 0.2 kg/cm^2 (3 psi) above the maximum allowable working pressure with the heating elements operating continuously at maximum rating.

23.7 Air Conditioning

When air conditioning systems are installed, detailed plans of piping and components are to be submitted for review showing compliance with Sections 9, 10, and 11 as applicable.

25 Cleaning

Piping systems intended for life support are to be thoroughly cleaned internally after installation and testing by the use of methods suitable for the gas to be transported in the system. A certificate of compliance from the system assembler or system manufacturer is to be provided to the Surveyor.

27 Testing

27.1 Pressure Test

The breathing gas system, except for pressure sensitive components, is to be tested to 1.5 times maximum allowable working pressure (MAWP) with water, oil free dry air, or dry nitrogen as appropriate. This test may be conducted prior to installation with the system assembled and with the components in their relative positions. Following the completion of the testing, the system is to then be purged and tested to insure that all traces of test gases are removed.

27.3 Leak Test

After installation, the system is to be given a leak test at maximum allowable working pressure. This is to be done with the gas normally used in service. Leakage is not to exceed a rate which will cause the pressure to decrease more than 1 percent in 4 hours. No leakage is permitted for oxygen systems.

27.5 Life Support Testing *(2007)*

After the unit is completely outfitted and before conducting the test dive required by Subsection 3/15, the life support system is to be tested in the presence of the Surveyor with all the hatches closed. (Also see Subsections 3/15 and 10/15). During testing, oxygen and carbon dioxide levels and barometer, relative humidity and temperature are to be monitored and recorded at intervals suitable to verify the system design but not exceeding 15 minutes. The monitored parameters are to be within acceptable ranges to the satisfaction of the Surveyor.

27.5.1

The test is to be conducted for 150 percent of the maximum normal dive time with the maximum number of occupants onboard.

27.5.2

The following must be demonstrated during the test:

i) CO_2 and O_2 levels and barometric pressure, relative humidity and temperature can be maintained within required parameters.

ii) Changing-out of the CO_2 absorbent can be achieved without exceeding a CO_2 concentration of 1% by volume referenced to standard temperature and pressure and that the concentration of CO_2 can be reestablished and maintained at or below 0.5% following the change-out.

27.5.3

A manned test with the maximum number of occupants, or a simulated occupancy test is to be conducted to determine time to breakthrough, where breakthrough is defined as a CO_2 concentration of 0.5% by volume referenced to standard temperature and pressure. The test may be continued beyond a CO_2 concentration of 0.5% (up to a maximum of 1%) to ensure that breakthrough is reached. The time required to achieve breakthrough is to be used in confirming the quantity of CO_2 absorbent required to be carried onboard for the reserve life support requirements.

27.5.4

As an alternative to 8/27.5.1, a manned test with the maximum number of occupants onboard is to be conducted until equilibrium is achieved by the CO_2 scrubber, plus an additional one hour. This manned test should be conducted for a minimum of three hours for all cases. This does not preclude the requirements of 8/27.5.2 and 8/27.5.3 above.

29 Filtration Systems

Where dust filtration systems are provided, filter materials are to be fire retardant.

31 Diver Lock-Outs on Untethered Submersible Units

31.1

The required controls and instrumentation for diver lock-out compartments are to be provided in the command compartment. Additional controls and instrumentation may be provided in the lock-out compartment. Override of the controls is to be possible from the command compartment at all times.

31.3

The pressurization gas will vary with depth from air to helium-oxygen to more exotic mixtures, such as neon-oxygen, at deeper depths. For short duration dives in excess of 200 feet, it is recommended that a lock pressurization capability of 200 feet/minute be provided. Means are to be provided to limit the divers vertical excursion capability. Diver tethering is recommended in order to ensure diver's ability to return to the submersible unit in low visibility water. For deeper depth dives, permanent diver tethering is to be considered.

31.5

Depressurization controls must be capable of controlling decompression at a rate suitable for the intended service. Diver's decompression must be controlled from outside the lock.

31.7

Diver locks are to be large enough to allow diver's decompression in uncramped position. The size of the hatch is to permit diver ingress and egress while wearing full diving gear.

31.9

The quantities of stored breathing gas are to be in accordance with Subsections 8/7, 8/9 and 8/13 of these Rules.

31.11

If divers are to be decompressed while the submersible is at depth, decompression and overboard dump or storage for chamber gases is to be provided.

33 Pressure Equalization

Means are to be provided for equalizing pressure on each side of a hatch prior to hatch opening. As an alternative an absolute pressure indicator with means of adjusting the internal pressure on either side may be provided.

35 Air Compressors

Air compressors are to be provided with nameplates indicating manufacturer, model, serial number, maximum rated outlet pressure, rated capacity, and safety valve setting. Compressed air purity for human respiration is to be in accordance with CGA specification G7 Grade D as a minimum requirement.

37 Mercury

Mercury is not to be used in equipment, instruments, etc.

This Page Intentionally Left Blank

SECTION 9 Engineering Systems

1 General

All systems are to be constructed, installed and tested to the satisfaction of the Surveyors and in accordance with the S*teel Vessel Rules*, except as modified herein. Engineering systems for hyperbaric facilities, underwater vehicles and systems may include, but not be limited to, the following:

i) Mating devices and systems

ii) External structures

iii) Hard, soft ballast tanks, trimming devices and their control systems

iv) Propulsion systems, steering equipment and controls

v) Emergency systems

3 Mating Systems

3.1

Mating systems between diving bells and deck decompression chambers are to enable their connection and disconnection easily and securely under the worst expected sea state. (See Appendix 4, Table 1.)

The mating devices are to be of suitable construction, consideration being given to the anticipated loads that may be imposed on them.

As a minimum, loads resulting from a sea state 6, in addition to the internal and external pressure, are to be considered. A less severe sea state may be considered when the mating system will be used on a support structure whose design parameters are based on a condition lesser than sea state 6. (See Appendix 4, Table 1)

3.3

Mating systems and clamping arrangements under internal pressure are to be designed, fabricated, inspected and tested in the presence of the Surveyor in accordance with Part 4, Chapter 4 of the *Steel Vessel Rules*.

3.5

A mating system is to be provided with safety interlock between the diving bell and the deck decompression chamber, in order to prevent inadvertent opening of hatches. A mechanical locking mechanism is required for hydraulically or pneumatically actuated closing devices.

3.7

Submersible units with diver lock-out are to be provided with devices to allow the lock-out mating operations with a deck decompression chamber. This mating device is also to comply with 9/3.1, 9/3.3 and 9/3.5 above.

3.9

Units equipped for mating with habitats, working chambers and other underwater structures are subject to special consideration, due importance being given to the expected loads from the mating forces, moments, pressure, currents, etc.

3.11

Where a power actuating system is used for the mating operations, an auxiliary system is to be provided as a backup to connect the two units in the event of failure of the normal power actuating system.

5 External Structures

5.1

External structures include all non-pressure retaining structures outside the pressure hull (e.g., floodable structures, supporting equipment and hydrodynamic fairings, submersible towers, wave splash plating, etc.).

External structures are to be of construction adequate to the function performed, consideration being given to their size and the anticipated loads which may be imposed on them, and they are to be constructed following sound engineering practice in accordance with approved plans.

Loads to be considered include those which result from bottoming, wave action, bumping alongside the tender, striking objects, and other loading resulting from the unit being operated, launched and recovered in sea state 6. A lesser sea state may be considered when it is intended that the unit be operated with a launch and recovery system whose design parameters are based on a lesser sea state.

Stress is not to exceed the allowable limits as defined in Subsection 6/25.

5.3

In order to avoid detrimental buoyancy effects on the unit, all free flooding parts of submersibles are to be designed so that all their inner spaces are fully flooded and vented. Suitable openings in the uppermost and bottom parts of the structure are to be provided.

Flood and vent openings are to be properly dimensioned and care is to be exercised to eliminate electrolytic action when dissimilar metals are used while exposed to sea water. Consideration is to be given to material deterioration in service.

Means of securing the closing appliances are to be permanently attached to the structure or to the appliances, and the arrangements are to be such that the closing appliances in way of personnel access hatches can be closed and secured from both sides. Consideration is to be given to the height of sills so that a minimum freeboard can be maintained. See Subsection 3/17 of these Rules.

Ballast tanks, piping systems, ballast lead rails and other equipment essential for the safe operation of the underwater vehicles, located outside the pressure hull, are to be as independent of the exostructure as possible.

5.5

All welded connections of the external structures to the exterior of the pressure hull are to be welded such as to minimize local stresses induced in the pressure hull. Inspection of such connections is to be feasible.

7 Ballast Tanks

7.1 Hard Ballast Tanks

Hard ballast tanks subject to internal and/or external pressure are to comply with the requirements applicable to Group I pressure vessels in Section 4-4-1 of the *Steel Vessel Rules* and in accordance with the applicable requirements of Sections 4, 5 and 6 of these Rules. Their capacity must be sufficient to compensate for all loading conditions. The quantity of water in the ballast tanks, along with their internal pressure, must be indicated at all times at the vehicle pilot stand.

7.3 Soft Ballast Tanks

Soft ballast tanks are compartments not subject to differential pressures. They are considered to be gravity tanks and are to be designed accordingly, together with their supports, fittings and openings. Control of the vents on the tanks is to be arranged so that failure of one valve or control line will not affect the integrity of the rest of the system.

9 Propulsion Systems, Steering Equipment, and Their Control

(2007) Submersibles and underwater vehicles are to be provided with adequate means for surface and underwater maneuvering. Adequate maneuvering controls and displays are to be provided for the safe operation of the vehicle.

These Rules apply to all propulsion systems, steering equipment, thrusters for dynamic positioning and depth control of the vehicles.

9.1 General

9.1.1

The number and output of each propulsion unit thruster is to be determined based on the intended service and speed requirements of the vehicle.

9.1.2

Propulsion systems and their supporting structures are to be designed for continuous service and for the intended depth. Motor casings are to be designed for the intended depth or are to be pressure compensated.

9.1.3

Detailed plans of foundations or attachments for machinery, pressure vessels and mechanical equipment are to be submitted for review. Welded connections are to comply with 9/5.5.

9.3 Shaft Design

Design basis and stress calculations may be required to substantiate the suitability and strength of the shaft for the intended service. The stress calculations are to cover the worst expected load conditions.

The factor of safety is not to be less than 2.0 as determined by the following equation:

$$1/FS = (S_s/Y) + (S_a/E)$$

where

FS = factor of safety

S_s = steady stress

S_a = cyclic stress

Y = yield strength of the material

E = corrected corrosion fatigue strength of the material

Consideration will be given to other not less effective recognized methods and standards for shaft designs.

9.5 Protection of Shafting

Shafts exposed to seawater are to be protected against galvanic corrosion. The use of graphite-impregnated packing in stuffing boxes is to be avoided because of the possibility of corrosion. Stainless steel, nickel-copper alloys or other shafting materials adversely affected by stagnant water are to be provided with a positive means of water circulation in stern tubes or similar enclosures that tend to trap water in contact with the shafting.

9.7 Shaft Seals

Detailed plans of shaft seals penetrating the hull are to be submitted. Tests demonstrating the adequacy of the shaft seals and shafting fabrication arrangements may be required.

9.9 Propeller Design

Calculations substantiating the design of the propellers in accordance with a recognized method may be required.

9.11 Steering Control System Arrangement

Detailed plans of the control systems for steering are to be submitted for review. Control systems are to be satisfactorily operated during trials to the Surveyor's satisfaction.

9.13 Externally Mounted Thrusters of 20 kW (25 hp) or Less

Where thrusters having an output of 20 kW (25 hp) or less are proposed with shafts not penetrating the pressure boundary of the submersible, manufacturer's data indicating suitability of the thruster for service at the intended water depth and evidence of satisfactory testing or service experience of the thruster under design service conditions may be considered in lieu of plans and data required to determine compliance with 9/9.3, 9/9.5 and 9/9.9. Submitted manufacturer's data is to include electrical rating, temperature rise and class of insulation.

SECTION 10 Mechanical Equipment

1 General

Pressure vessels, piping systems and other mechanical equipment necessary for the operations of the underwater vehicle or the hyperbaric facility are to be designed, constructed, installed, inspected and tested in accordance with the *Steel Vessel Rules*, to the satisfaction of the Surveyor, except as modified herein. Additionally, life support and engineering systems are to comply with Sections 8, 9 and 11 of these Rules.

3 Production Equipment

Equipment for the production of hydrocarbon is to comply with the ABS *Guide for Building and Classing Facilities for Offshore Installations*. As an alternative, this equipment may be accepted based on compliance with a recognized standard.

5 Pressure Vessels, Heat Exchangers and Heaters

5.1 General *(2002)*

5.1.1

Plans, calculations and data for all pressure vessels, heat exchangers and heaters are to be submitted for review and approval in accordance with Subsection 1/7 of these Rules. They are to be constructed, installed, inspected and tested in the presence and to the satisfaction of the Surveyor in accordance with approved plans.

5.1.2

All pressure vessels, heat exchangers and heaters are to comply with the requirements applicable to Group I pressure vessels in Section 4-4-1 of the *Steel Vessel Rules*.

5.1.3

Mass produced pressure vessels may be accepted in accordance with 4-4-1/1.11.2 of the *Steel Vessel Rules*.

5.1.4

Seamless pressure vessels for gasses may be accepted in accordance with 4-4-1/1.11.4 of the *Steel Vessel Rules*, provided their application does not violate any restrictions contained in the standard applied.

5.1.5

Fiber reinforced plastic (FRP) pressure vessels may be accepted on a case-by-case basis.

5.3 Pressure Vessels Subject to External Pressure *(2002)*

5.3.1

Pressure vessels, heat exchangers and heaters subject to external pressure are to comply with Sections 4, 5 and 6 of these Rules and are to be tested in accordance with Subsection 3/13 in the presence and to the satisfaction of the Surveyor.

5.3.2

As an alternative to the design requirements of 10/5.3.1 above, pressure vessels, heat exchangers and heaters subject to external pressure are to comply with the appropriate external pressure requirements in the codes or standards acceptable for Group I pressure vessels in Section 4-4-1 of the *Steel Vessel Rules*.

5.3.3

Fiber reinforced plastic (FRP) pressure vessels are to be hydrostatically tested in accordance with Subsection 3/13 in the presence and to the satisfaction of the Surveyor.

5.5 Pressure Vessel Location

Pressure vessels and heat exchangers are not to be located within the pressure boundary of the underwater vehicle or hyperbaric installation unless calculations are submitted showing that the inadvertent release of the contained fluid(s) will not increase the pressure inside the chamber by more than one atmosphere. See 8/7.5.2.

5.7 Safety Relief Devices *(2007)*

Pressure vessels, heat exchangers and heaters are to be protected by suitably sized safety relief devices set at a pressure not exceeding their maximum allowable working pressure (MAWP) and they are to be installed with no intervening valves between the pressure container and the safety relief device. The maximum allowable working pressure is the maximum pressure permissible at the top of the pressure vessel, heat exchanger or heater in its normal operating condition and at the designated concurrent temperature specified for that pressure. If the safety devices are mounted outside the main pressure hull, they are to be constructed of suitable non-corrosive materials and are to be inspected on a regular basis in accordance with the procedure outlined in the approved Maintenance Manual (See 1/9.3). For these safety devices, the designer is to consider the effect of seawater back-pressure acting on the downstream side of the safety device. If the safety devices are mounted within the main pressure hull, then it is to be demonstrated by calculations that the release of the fluid contained in the pressure vessel will not increase the pressure within the main pressure hull by more than 1 atmosphere, nor raise the partial pressure of the atmospheric gases above their maximum allowable levels. (See 8/7.5.2.) Special consideration will be given to the equivalent alternative arrangements, such as multiple pressure vessel installations, as determined suitable by the Bureau.

7 Piping Systems

7.1 General

Piping systems and auxiliaries are to be designed, constructed, installed, inspected, tested and surveyed in accordance with the requirements for Class I piping systems in Chapter 3 and Chapter 4 of the ABS *Rules for Materials and Welding (Part 2)*, Part 4, Chapter 6 of the *Steel Vessel Rules* and the ABS *Rules for Survey After Construction (Part 7)*, except as modified below.

7.3 Wall Thickness of Pipes and Tubes

The minimum thickness of pipes and tubes is to comply with Part 4, Chapter 6 of the *Steel Vessel Rules*.

7.5 Wall Thickness of Pipes and Tubes Subject to External Pressure

The minimum thickness of piping subject to external pressure is to be the greater of the thickness determined by the following equations:

$$t = \left[\frac{(1-\nu^2)(12WR^3)}{E} \right]^{1/3} + c$$

$$t = 3WR_o/Q_y$$

where

W	=	external pressure
T	=	thickness
E	=	modulus of elasticity
R	=	mean radius
R_o	=	outside radius
ν	=	Poisson's ratio
Q_y	=	yield strength
c	=	0.00 for plain-end pipe or tubing
	=	1.27 mm (0.05 in.) for all threaded pipe 17 mm ($^3/_8$ in.) O.D. and smaller
	=	depth of thread h for all threaded pipe over 17 mm ($^3/_8$ in.) O.D.
	=	depth of groove for grooved pipe

7.7 Piping Systems Penetrating the Pressure Boundary

Piping systems penetrating pressure boundaries are to have valves as required below, and pipes and fittings connecting shell penetrations to those valves are to be as short as possible. Pipes connecting the stop valves to the penetrations on the pressure boundary are to be adequate for the design pressure and temperature, but are not to be less than the equivalent of ANSI Schedule 160 construction. As an alternative, special consideration will be given to pressure boundary penetrations provided with internal and external mechanical protection and protection against corrosion. These valves and the fittings connecting the valves to shell penetrations, are to have pressure ratings corresponding to the pressure and temperature of the fluid contained.

7.7.1 Submersibles, Personnel Capsules, and Habitat

A manually operated stop valve is to be provided. An additional stop valve or a check valve is to be provided for systems connected to sea suctions or discharges.

7.7.2 Hyperbaric Chambers and Diving Bells

A manually operated stop valve is to be provided at each pressure boundary piping penetration. All interior breathing and pressure supply controls are to be provided with means of overriding and controlling them from the exterior. Additionally, piping exclusively carrying fluids into the diving bell is to have a check valve close to and downstream of the stop valve.

7.7.3 All Units

7.7.3(a) Oxygen piping in all underwater systems and hyperbaric installations is to run, as far as practicable, apart from other systems.

7.7.3(b) Breathing gas pipes are to run, as far as practicable, apart from electrical cable conduits.

7.7.3(c) Valves are to be constructed so that the stem is positively restrained from being screwed out of the body.

7.7.3(d) The open and close position of each valve and its turning direction are to be clearly indicated as far as practical.

7.9

Expansion in piping systems is to be compensated by pipe bends or other means. Piping supports and support arrangements are to be provided.

7.11

Means are to be provided for complete draining and venting of all piping systems.

7.13

Piping systems that may be exposed to a pressure higher than that for which they are designed are to be provided with overpressure protection. These overpressure protections for gas piping systems are to be piped outside or to an enclosed tank connected to the outside. This tank is to be provided with a pressure gage and a check valve. As an alternative, calculations are to be submitted and tests carried out showing that the release of the contained fluid will not increase the pressure within the pressure boundary by more than 1 atmosphere. See 8/7.5.2.

7.15 *(2002)*

Pipe sections are to be joined by full penetration welds. Flange connections may be accepted provided they comply with a recognized standard. Butt weld flanges are to be used except that socket weld flanges may be used up to the equivalent of 3-inch NPS and for non-essential service. Special considerations will be given to other pipe connections.

7.17

Piping, fittings, and penetrations exposed to sea water or to a sea water atmosphere are to be corrosion resistant and have demonstrated satisfactory performance for the intended service.

7.19

Flexible, non-metallic hose and tubing may be used provided particular attention is paid to the hose (or tubing) material, pressure, temperature of the fluid carried, and environment toxicity, combustibility, etc. See 8/15.1.3.

All hoses and tubing are to be of approved design, fabrication and testing to the satisfaction of the Surveyor. Tubing and hoses are to be rated for not less than the MAWP of the system and are to have a minimum burst strength of 4 times the MAWP of the system.

Flexible non-metallic hoses are to be complete with factory assembled end fittings or factory supplied end fittings installed in accordance with manufacturer's procedures. Hose clamps and similar types of attachments are not permitted in pressurized or vital systems.

7.21

When internal pressure-reducing valves are fitted, provision is to be made for overriding them in the event of failure. All piping down stream and upstream of reducing valves are to be adequate for the maximum supply pressure. A check valve is to be provided down stream of the reducing valve to protect against back pressure during override.

7.23 *(2007)*

Power driven pumps of hydraulic systems used for emergency services are to be backed up with at least one manually operated pump.

Filters are to be installed in all hydraulic piping systems, and they are to be replaceable without impairing the system's integrity.

9 Color-coding and Labeling

9.1

All underwater systems and hyperbaric facilities are to use consistent color-coding and labeling for piping, pressure vessels and other mechanical equipment. See also 8/15.13.

Piping and gas storage bottles are to be colored and labeled to indicate content and maximum working pressure. For labeling, a color that contrasts with that of the pipe is to be used. Section 10, Table 1 gives the color codes required by the US Navy however, other color codes, such as that provided in IMO "Code of Safety for Diving Systems" Resolution A.536(13), may be used.

TABLE 1
Color Codes for Piping and Gas Storage Bottles

Name	*Designation*	*Color*
Oxygen	O_2	Dark Green
Nitrogen	N	Light Gray
Air (Low Pressure)	ALP	Black
Air (High Pressure)	AHP	Black
Helium	He	Buff
Helium-Oxygen Mix	He-O_2	Buff and Dark Green
Exhaust	E	Silver

9.3

Color code and labeling requirements vary substantially between the various jurisdictions under which the underwater system or hyperbaric facility will be used. It is therefore the responsibility of the owner/user of the units to specify the appropriate color coding and labeling system.

11 Radiographic Examination of Welded Piping Connections

All Group I welded pipe connections are to be subjected to 100 percent radiographic examination without any limitations of wall thickness or diameter. Socket pipe welds or any other combination welded and mechanical joints, where permitted and where radiographic examination is impracticable, are to be inspected by other approved methods.

13 Pumps and Compressors

Tests demonstrating the adequacy of pumps, compressors and their arrangements used in underwater systems and hyperbaric facilities may be required in the presence of the Surveyor.

Capacities of all pumps, compressors, and associated pressure relief devices are to be included in piping systems plan submittals. Pressure relief devices are to relieve and discharge in a manner that will not affect the chamber's internal pressure nor the operational integrity of the piping system.

15 Air Conditioning System *(2007)*

When an air conditioning system is provided, documentation is to be submitted for review and approval in accordance with Sections 8, 9 and 10. The air conditioning system is to be functionally tested during the life support system tests as per Subsection 3/15 and 8/27.5.

17 Equipment

Underwater vehicles and systems are to be equipped with the following as applicable:

i) Valves, gauges and such other equipment as is necessary to control all vital systems, including any fuel supply and exhaust systems.

ii) Valves, gauges and other equipment as are necessary to control the depth, attitude, and rate of descent and ascent.

iii) Valves or other fittings to enable manipulators, grasping or anchoring devices and jettisonable equipment to be released in an emergency situation.

iv) An internal release device, suitably protected against inadvertent operation, for severing or releasing the umbilical cable.

v) *(2007)* For underwater towing applications, an internal release device, suitably protected against inadvertent operation, for releasing the towing cable of a towed submersible.

vi) Anchors and cables of sufficient number weight and strength, if necessary.

SECTION 11 Electrical Installations

1 General

Electrical installations and equipment for the systems covered by these Rules are to be designed, fabricated, installed, inspected, and tested to the satisfaction of the Surveyor in accordance with Part 4, Chapter 8 of the *Steel Vessel Rules* except as modified hereinafter.

3 Application

3.1 Environment

All electrical equipment is to be designed for the environment in which it will operate in order to minimize the risk of fire, explosion, electric shock and emission of toxic gases to personnel, and galvanic action on the pressure boundary.

3.3 Pressurization

Electrical equipment installed in hyperbaric environments is not to be damaged by pressurization and depressurization of the environment.

3.5 Hazardous Areas

Electrical equipment installed in hazardous areas, electrical equipment in underwater units which contain installations for the production of hydrocarbons, and electrical equipment in compartments which are intended to be used to transfer personnel to such units or areas are to be certified by a competent independent testing laboratory as explosion proof or intrinsically safe.

3.7 Underwater Electrical Equipment

Underwater electrical equipment is to be rated for an ambient temperature of 30°C (86°F). Electrical installations exposed to the open atmosphere are to be rated for an ambient temperature of 40°C (104°F).

3.9 Humidity *(2007)*

All electrical equipment necessary to the safe completion of the mission, including equipment that may be needed during an emergency, is to be suitable for 100 percent relative humidity or the conditions anticipated onboard the unit.

5 Power

5.1 Main and Emergency Power *(2002)*

The electrical installations essential to the safe completion of the mission are to be supplied from independent main and emergency sources of electrical power. The emergency source of electrical power is to be available in not more than 45 seconds after interruption of the main power source. The main power source for all units is to have sufficient capacity for the design mission. In addition, for untethered units, prior to commencing any dive, the main power source is to have a reserve capacity sufficient to operate the following systems for the duration required in Subsection 8/11 or 8/12 as applicable to the subject unit.

i) Emergency internal lighting

ii) Communication equipment

iii) Life support systems

iv) Environmental monitoring equipment

v) Essential control systems

vi) Other equipment necessary to sustain life

5.3 Power Source

The main and the emergency power sources may be either a generator driven by a prime mover or batteries.

5.5 Power Source Separation

The emergency source of power is to be separated from the main source as much as possible in order that its operations remain unaffected in the event of fire or other hazard causing failure to the main electrical installation.

5.7 Automatic Emergency Power Changeover

If the changeover to emergency power is automatic it is to activate an alarm at the control station or pilot stand and means are to be provided to manually switch back to main power.

5.9 Equipment on Emergency Power

The independent emergency source of power is to be capable of feeding the following users for the duration specified in 8/13.5 of these Rules:

i) Emergency internal lighting

ii) Communication system

iii) Emergency life support system (if electrically powered)

iv) Launch and Recovery System

v) Environmental monitoring equipment

vi) Controls for emergency systems

vii) Any electrical equipment deemed essential for therapeutic procedures or hyperbaric chambers of hospital facilities and helicopter (or truck) decompression chambers

5.11 Sizing of Emergency Source

The emergency source of power is to be sized to supply all connected loads.

7 Voltage

7.1 Maximum Voltage

In general, installations for the mission within a personnel pressure boundary are to have the following maximum voltages:

i) For power and heating equipment permanently installed, 250 volts AC or DC.

ii) For lighting, socket outlets, portable appliances and other users supplied by flexible cables, and for communication and instrumentation equipment, 48 volts.

iii) Voltages for temporary connections to ship's or shore power will be specially considered.

7.3 Protection from Higher Voltages

Higher voltages than those specified above may be fitted, provided additional precautions are taken in order to obtain an equivalent level of safety, e.g.:

i) By providing a higher degree of enclosure

ii) By reducing the possible earth fault currents

iii) By providing a fixed barrier which keeps divers at safe distance from the equipment

iv) By providing double insulation, comprising two layers of insulation with a conducting screen in between

v) By providing protective diver suits

9 Underwater Safeguards

9.1 Electrical Equipment

Electrical equipment used in water will be subject of special design consideration in each separate case. However, provisions are to be taken to reduce to harmless levels the possible fault currents to which the divers can be exposed.

9.3 Habitats and Working Chambers

For habitats and working chambers see 8/7.7.4.

11 Batteries

11.1 Reliability

Drawings, specifications and sufficient test data or operating experience are to be provided to ascertain that the batteries can reliably perform for their estimated life under their service conditions.

11.3 Battery Type

Batteries other than lead-acid type are to be supported by satisfactory service data, including test data, demonstrating that they are capable of providing the required output and being recharged to required power levels over a specified period of time. Gas emission data, as applicable, are also to be considered in connection with 11/11.7 and 11/11.9 below.

11.5 Terminal Potting *(2002)*

Cell top terminal potting, if used, is to possess good dielectric properties and is not to absorb electrolyte, oil or water at design operating pressures. A dry insulation resistance measurement is to be made by means of a 500 volt DC insulation resistance test instrument (megger) between the leads and the insulated casing and is to show a reading of at least 50 megohms.

11.7 Pressure Compensation

When pressure compensated systems are used, they are to contain a sufficient volume to supply the battery throughout the extremes of pressure, temperature and entrained gas volumes for the design depth. Consideration is to be given to the bulk modulus and expansion characteristics of the fluid to ensure sufficient quantity. The system is to contain pressure relief provisions, so that generated gases from cell gas traps may be vented overboard. A valve, when used to prevent seawater from entering the battery housing, is to prevent explosion of appreciable quantities of compensating fluid, and is to be jam free to prevent cell or system damage due to gas generated internal pressure. The valve is to be sized for release of expanding gas at a rate corresponding to its underwater system emergency rate of ascent. Manufacturer's capacity data on valves are to be evaluated before installation.

11.9 Batteries Within Pressure Boundaries

When lead acid batteries are located within pressure boundaries, particular attention is to be given to segregation chambers, ventilation, hydrogen monitoring devices and alarms and use of catalytic burners for gas emissions. See also 8/7.7.2.

11.11 Battery Compartment Penetrations

Electric cables entering the battery compartment are to be provided with water- and gas-tight penetrations of the bulkheads of the compartment.

11.13 Overload and Short Circuit Protection

All batteries are to be provided with overload and short circuit protections on each ungrounded conductor (see 11/15.1). The protective devices are to be designed for the maximum charge or discharge voltage and current. Thermal elements of overload protective devices must be tested for operation at maximum design pressure of the protective device. Overload and short circuit protection are to be located in a separate space from the battery compartment, but length of cables between battery and the protection is to be kept as short as feasible.

11.15 Hazardous Areas

All electrical equipment in battery compartments is to be explosion proof or intrinsically safe. See 11/3.5.

11.17 Battery Chargers

Charging equipment for batteries is to be provided with reverse current protection.

11.19 Corrosion

Battery compartments are to be adequately protected against corrosion.

13 Motors

13.1 Propulsion Motors Not Subject to Pressure *(2002)*

Propulsion motors inside a pressure boundary of submersible units are to be suitable for marine atmosphere, anticipated operating temperatures and shock loading.

13.3 Propulsion Motors Subject to Pressure *(2002)*

Propulsion motors subject to operational pressure are to be designed with due considerations to the consequences of environmental corrosion and pressure temperature and shock loading.

Test data or satisfactory service experience demonstrating adequacy for intended service are to be used to substantiate the design. When pressure compensators are used, they are to be supported by complete design and detail plans and calculations. When the adequacy of pressure compensators is predicated on the complete removal of air inside the housing, the contemplated air purging procedure is to be included in the operations manual.

13.5 Other Electric Motors

Other electric motors are to be certified by the manufacturer as suitable for the intended location and service conditions.

13.7 Overload Alarms

All electric motors for propulsion and other vital services are to be equipped with overload alarms in addition to motor overload protection.

13.9 Nameplates

All electric motors are to be provided with nameplates showing the information required for their safe use in the electrical installation of which they are part. Labels are to be affixed to each motor and are to clearly show to which electrical system the motor belongs.

15 Distribution and Circuit Protection

15.1 General

The pressure boundary is not to be used as a current carrying conductor for power, heating, lighting, control and instrumentation. All electrical power distribution systems are to be ungrounded and insulated to minimize the occurrence of faults and stray currents that may create galvanic corrosion.

15.3 Ground Detectors

Ground detectors or interrupters are to be provided for all systems.

15.5 Circuit Breakers and Fuses *(2007)*

Circuits are to be protected from overloads and short circuits by protective devices that open all conductors. These protective devices are to be circuit breakers, except fuses may be used for immersion heaters and where overcurrent devices are inaccessible during normal operations. Essential and emergency circuits are to be provided with short circuit relays that can be reset. In general, fuses are not to be used in oil compensated compartments. Special consideration will be given to the use of fuses in oil compensated compartments, provided it can be demonstrated that the fuses are designed to operate in ambient pressure. Fuses and thermal breakers are not permitted in a Helium-Oxygen environment. See also 11/13.7.

15.7 Pressure Boundary Power Penetrations *(2002)*

Both positive and negative conductors from the main and auxiliary power sources are not to pass through the same penetrator or connection in a pressure boundary and are to be spaced sufficiently to prevent damaging currents. All power leads passing through a pressure boundary are to be adequately protected by circuit breakers or fuses against overload and short circuit. The circuit breakers or fuses are to be located on the power source side of the pressure boundary and are to have the ability to open the circuit quickly to prevent damage to the watertight integrity of the electrical penetration. Tests may be required to demonstrate the ability of the device to perform as mentioned above.

15.9 Distribution Panels *(2002)*

All distribution panels are to be accessible during operation. It is to be possible to disconnect power to each chamber separately.

15.11 Electromagnetic and Radio Frequency Interference

The effect of electromagnetic and radio-frequency interference from adjacent circuits on controls and instruments is to be considered. Circuits are to be shielded if necessary.

15.13 Separation of Cables and Wiring

15.13.1

Cables and wiring of circuits supplied by different voltages and by the main and emergency circuits are to be effectively separated from each other. Electric plugs, sockets and receptacles are to be of a type which prevent improper inter-connections of the various systems and are to be provided with a means of securing after connection is made. The use of a color coding for the various systems is recommended.

15.13.2 *(2002)*

Intrinsically safe wiring is to be separated from non intrinsically safe wiring by at least 50 mm (2 in.) and in accordance with the manufacturer's recommendations. Other suitable standards may be acceptable.

15.15 Feeds

The following users are to be supplied from separate feeders:

i) Handling systems for submersible units

ii) Normal lighting for each unit (or chamber)

iii) Emergency lighting

iv) Normal life support

v) Emergency life support

vi) Communication system

vii) Vital instrumentation and equipment

viii) Controls for emergency systems

15.17 Insulation

Insulating material used in the construction of panels and switchboards is to be of a type that does not give off toxic gases in case of fire.

15.19 Electrical Instrumentation

Sufficient drawings, specifications and test data or operating experience are to demonstrate that the reliability of the measuring devices is consistent with control requirements in the intended environment. Vital measuring devices used to control may have a backup or alternative means for providing measurements. In general, a voltmeter, an ammeter, and a ground detector (or interrupter) for each conductor of each different voltage system are suitable minimum instrumentation. This instrumentation may be located in a centralized panel or station.

15.21 Grounding

All metal parts of the switchboards, other than current carrying parts, are to be grounded. All chambers are to be provided with grounding connection devices for plugs.

17 Distribution Cables, Wiring and Penetrators

17.1 General

Cables and wiring are to be in accordance with Part 4, Chapter 8 of the *Steel Vessel Rules*.

17.3 Testing of Cable Assemblies *(2007)*

Materials for cable and wiring insulation subjected to external pressure are to be able to withstand a hydrostatic pressure of 1.5 times the unit's design pressure. Each submerged cable assembly is to be tested as indicated below.

17.3.1 Visual Examination

A visual inspection of the cable assembly shall be made to verify there are no cuts, cracks, or other physical damage to the cable jackets or over molding/potting used in the manufacture of the cable assembly. In addition, a visual inspection of sealing grooves, sealing faces and threads shall be made to verify there are no defects that may cause a failure of the seals or that there are any defects or inclusions, including the presence of residual epoxy or urethane materials from the manufacturing process.

17.3.2 Penetrator Cable Assemblies

All electrical penetrator cable assemblies that penetrate a pressure boundary (excluding external light housings, small electrical equipment canisters, thruster housings etc.) and are subjected to external pressure, shall be tested as follows in a manner that simulates the intended use of the cable. This applies to compensated and uncompensated cables.

17.3.2(a) Pressure Testing of the Penetrator. The penetrator insert assembly, prior to any overmoulding and cable assembly, shall be pneumatically or hydrostatically pressure tested to 1.25 times unit's design pressure. The pressure is to be held for 5 minutes with no signs of leaks, cracking, extrusion or other signs of failure.

17.3.2(b) Hydrostatic Tests. Penetrator cable assemblies shall be pressure cycled in seawater, or equivalent salt water solution, a total of 6 times in a hydrostatic test chamber. The penetrator cable shall be installed in the test chamber in a manner so as to simulate its intended use. The minimum test chamber pressure shall be 1.25 times the unit's design pressure and the electrical measurements as per 11/17.3.2(c) shall be taken during the final (6th) pressure cycle.

17.3.2(c) Electrical Tests. Penetrator cable assemblies are to be tested by the continuous application of an alternating current voltage of at least 500 volts for one minute. The quality of the assembly is to be such that that the leakage current will not prevent proper operation nor expose personnel to unsafe voltages. Special consideration will be given to voltage sensitive cables.

Insulation resistance measurements are to be taken and recorded during the last pressure hold cycle as follows:

i) Between each conductor and all other conductors in the cable assembly.

ii) Between each shield in the cable assembly and all other conductors in the cable assembly (including other shields if applicable).

iii) Between each shield and the cable assembly's metal shell (or chamber lid).

iv) Between each conductor and the cable assembly's metal shell (or chamber lid).

17.3.3 Non Penetrator Cable Assemblies Subject to External Pressures

This requirement is only applicable to cable assemblies used for essential and emergency services.

17.3.3(a) Electrical Tests. Non penetrator cable assemblies are to be tested by the continuous application of an alternating current voltage of at least 500 volts for one minute. The quality of the assembly is to be such that that the leakage current will not prevent proper operation nor expose personnel to unsafe voltages. These tests are to be performed with the jacket exposed to seawater (Jackets of compensated cables do not have to be exposed to sea water). Special consideration will be given to voltage sensitive cables.

Insulation resistance measurements are to be taken and recorded as follows:

i) Between each conductor and all other conductors in the cable assembly.

ii) Between each shield in the cable assembly and all other conductors in the cable assembly (including other shields if applicable).

iii) Between each shield and the cable assembly's metal shell (or chamber lid).

iv) Between each conductor and the cable assembly's metal shell (or chamber lid).

17.5 Flexible Cables *(2007)*

Flexible cords for transmission of electric power and signals are to be of the watertight construction. For gland type penetrators, the cables must be of waterblock construction.

17.7 Mechanical Protection

Cables are to be protected from mechanical damage. Tensile loads are not to be applied to electrical cables or wiring.

17.9 Umbilical Cable Connectors

Umbilical cables are to have connectors that are corrosion resistant and resistant to accidental disengagement. They are to be arranged so that the weight of the bell (or capsule) is borne by the strength member where the umbilical is considered to be a secondary means of recovery. See also Subsection 8/17.

17.11 Electrical Penetrators

All electrical penetrators in the pressure boundary are to be arranged with couplings that are distinct from penetrators for fluid services. They are to be gas and watertight even in the event of damage to the connecting cable.

17.13 Prototype Testing of Gland Type Penetrators *(2007)*

Gland type penetrators (those for which the electrical cable forms part of the pressure boundary) used for electrical service are to be tested by the manufacturer as indicated below, in the listed sequence of tests. These penetrators are to be tested assembled with a short length of cable of the type that will be used in the final installation. The cable and penetrator assemblies are to show no sign of deficiency during and after the testing.

17.13.1

Voltage test by applying 1 kV plus twice the design voltage for 1 minute to each conductor and armor separately.

17.13.2

Hydrostatic test to a pressure of 1.5 times the unit's design pressure repeated six times. The pressure is to be applied to the side that will be under pressure in the actual application and is to be maintained for 20 minutes after the last cycle.

17.13.3

For applications where the actual pressurizing medium is gas, a gas leakage test with cable cut open using air to twice the design pressure or helium to 1.5 times the unit's design pressure.

17.13.4

Insulation test to 5 megohm at the unit's design pressure applying salt water. Tests are to be made between each conductor and armor.

Novel designs that have not be substantiated by service experience or acceptable test data for the operating depth will require full scale strength and cycling testing to at least 2.5 times the operating depth.

17.15 Prototype Testing of Pin Type Penetrators *(2007)*

Pin type penetrators (those for which the electrical cable does not form part of the pressure boundary) used for electrical service are to be tested by the manufacturer as indicated below, in the listed sequence of tests. The penetrator assemblies are to show no sign of deficiency during and after the testing.

In cases where it is not clear that the method of attachment of the conductors will not compromise the penetrator pin sealing arrangement, the ABS Technical Office or Surveyor may require the attachment of a short piece of conductor to each pin, prior to testing.

17.15.1

Voltage test by separately applying 1 kV plus twice the design voltage for 1 minute across each conductor pin and the penetrator body.

17.15.2

Hydrostatic test to a pressure of 1.5 times the unit's design pressure repeated six times. The pressure is to be applied to the side that will be under pressure in the actual application and is to be maintained for 20 minutes after the last cycle.

17.15.3

For applications where the actual pressurizing medium is gas, a gas leakage test using air to twice the unit's design pressure or helium to 1.5 times the unit's design pressure.

17.15.4

Insulation test to 5 megohm at the unit's design pressure. Tests are to be made between each conductor pin and the penetrator body.

Novel designs that have not been substantiated by service experience or acceptable test data for the operating depth will require full scale strength and cycling testing to at least 2.5 times the operating depth.

19 Lighting

Each unit is to be provided with adequate normal and emergency lighting to allow for safe operations by the occupants.

21 Electrical Controls

21.1 Back Up *(2007)*

Manual back up for electrical controls is to be provided for emergency recovery or surfacing. Printed instructions for emergency surfacing are to be permanently affixed adjacent to the manual controls in underwater vehicles. For deep-diving units, special consideration will be given to the equivalent alternative arrangements as determined suitable by the Bureau based on submission of a risk assessment study.

21.3 Separation of Control Leads

Duplicate control leads for a single circuit are not to pass through the same penetrator and should be spaced as widely apart as is feasible.

23 Communication Systems

23.1 Locations

The communication system is to be arranged for direct two-way communication between the control stand and the following as applicable:

i) Diver in water, except scuba divers

ii) Diving bell

iii) Each compartment of the chamber

iv) Diving system handling position and emergency control station

v) Dynamic positioning room (on drilling platforms)

vi) Navigation bridge, ship's command center, drilling floor, drilling control room. See also Section 3.

23.3 Emergency Communication

An emergency means of communication between control stand and divers in the deck decompression chamber and in the diving bell is to be available. For diving bells, this may be a self-contained, through water communication system.

23.5 Interference

Communication systems are to be installed to minimize disturbances or interference generated by foreign sources of energy.

SECTION

12 Additional Requirements for Submersibles Intended for Transportation of Passengers*

* *Note:* A passenger is every person other than the pilot and the members of the crew or other persons employed or engaged in any capacity on board a submersible on the business of that submersible.

1 General

Submersibles intended for transportation of passengers are to comply with the following additional requirements.

3 Operational Restrictions and Safeguards *(2002)*

3.1 *(2007)*

Classification of passenger submersibles is issued for operation in waters with a sea-bed depth not greater than 105 percent of the rated depth of the unit, within the design parameters in Subsection 1/7 and Paragraph 12/3.3 and under the supervision of dedicated surface support during missions. Special consideration will be given for operation in waters with a sea-bed depth greater than 105 percent of the rated depth of the unit, on the basis of safety evaluations and risk analysis demonstrating the additional safety characteristics of the design and/or operational procedures.

Passenger submersibles are to be operated only in areas surveyed in accordance with Subsection 12/5.

3.3

In addition to the required plans, calculations and data in Subsection 1/7 of these Rules, the designer of the submersible is to submit the following operational parameters as a basis for design review and classification:

i) Maximum current

ii) Night/limited visibility operation

iii) Number of passengers/crew

iv) Maximum towing speed/towing line tension

v) Maximum speed while surfaced and submerged

vi) List of hazards to be avoided.

5 Dive Sites *(2007)*

Dive sites for passenger submersibles are to be investigated by the operator for operational hazards prior to diving. Results of this investigation are to be documented as a dive site report. This dive site report is to be provided to the pilot prior to the first dive at each new dive site. Updates to the dive site report for the same site may be necessary if conditions affecting the safe operation of the unit are known to have changed significantly.

7 Segregation of Spaces *(2007)*

Requirements for segregation chambers for machinery other than batteries will be subject to special consideration.

Pilot control stations or critical controls for the safe operation of submersibles are to be protected from accidental activation by passengers. When this is not practicable, special consideration will be given to alternative arrangements including operational procedures providing an equivalent level of safety.

9 Bilge System

9.1 *(2007)*

All units are to be provided with a fixed bilge system capable of draining all spaces inside the vehicle. When overboard discharges penetrating the pressure boundary are fitted they are to have an internal stop-check valve as close as possible to the hull and a check valve in the discharge side of the pump. Special consideration may be given to alternative bilge pumping arrangements based on a risk assessment and the unit design.

9.3

A bilge alarm is to be provided at the pilot stand for early detection of water accumulation.

11 Emergency Lifting *(2007)*

The submersible is to be equipped with the appropriate number of lifting points. Each of these points is to be capable of independently raising the vehicle to the surface in an emergency. At least one of these points is to be accessible under the most severe damaged conditions. Each lifting point is to be designed as per the loads specified in Subsection 3/11.

13 Acrylic Window Protection *(2007)*

A transparent, shatterproof protective screen is to be provided on the interior of all windows normally accessible to passengers. Where this is not practical or feasible, precautions are to be taken to prevent passengers from causing physical damage to the windows.

15 Propulsion

Propulsion systems and thrusters are to comply with the applicable requirements in Section 9 of these Rules and the following:

15.1

The output of the propulsion system and thrusters is to be sufficient to reach the vehicle's speed for maneuvering.

15.3 *(2007)*

Use of internal combustion engines will be considered on a case-by-case basis.

This Page Intentionally Left Blank

SECTION 13 Surveys After Construction *(2002)*

1 Surveys

The surveys after construction for Underwater Vehicles, Systems and Hyperbaric Facilities are to be in accordance with the applicable requirements as contained in the ABS *Rules for Survey After Construction (Part 7)*.

This Page Intentionally Left Blank

APPENDIX 1 Certification of Support Components

1 General

Appendices 2 through 5 present the requirements and procedures that are to be considered for the certification of underwater system support components. Underwater system support components that have been built under the supervision of the Surveyors to the Bureau to the full requirements of the appropriate Appendix (2 through 5), or equivalent, or the Rules, as applicable, will be issued certificates with the symbol ✠ followed by the appropriate notation, such as **Deck Decompression Chamber**, **Dive Control Station**, **Handling System**, **Remote Operated Vehicle**, etc. See Section 2 of these Rules for definitions. Support components certified under the provisions of these Appendices, whose surveys are maintained current, are eligible for use in a classed system (see Subsections 1/1 and 1/5 of these Rules). Certificates will provide for endorsement by the Surveyor upon satisfactory completion of periodical surveys.

3 Scope and Conditions of Certification

The scope and conditions of certification are in all respects equivalent to those of Section 1 of these Rules, unless specifically otherwise indicated herein.

5 Support Components not Built Under Survey

Support components not built under the supervision of the Surveyors to this Bureau, but for which the certification is requested at a later date, will require submittal of available documentation listed in the appropriate Appendix as applicable in conjunction with the following items:

i) Design calculations

ii) Fabrication or as fitted plans

iii) Welding procedures (WPS) and performance qualifications records (PQR)

iv) NDT Records

v) Material mill test reports

vi) All other certificates of past surveys and test results conducted by the original certifying agency, insofar as such documentation is available and valid.

vii) Written test procedures for the tests and trials required to be performed for certification along with operations and maintenance manuals.

Additionally, the system will be subject to a special certification survey, hydrostatic and functional tests. Where found satisfactory and thereafter approved by the Committee, the support component will be issued a certificate with the appropriate symbol but the ✠ signifying survey during construction will be omitted.

This Page Intentionally Left Blank

APPENDIX 2 Certification of Dive Control Stations

1 Certification

Dive control stations that comply with the requirements of this Appendix and have been built under the supervision of the Surveyor to the Bureau will be issued an appropriate certificate as indicated in Appendix 1.

3 Submissions of Plans, Calculations and Data

Before commencement of fabrication, plans and other documentation providing the required particulars are to be submitted in triplicate. Vendor plans and other documentation are to be submitted in quadruplicate if fabrication site is different from installation site. An additional copy of all plans and documentation is to be available for the Surveyor performing surveys after construction at the location where the unit or system is operated.

3.1 Plans

The following plans are required for the Bureau's review and approval and are to be submitted as applicable to the particular design features:

- General arrangement
- Cross-section assembly
- Outline of station
- Layout of control stands and consoles
- Front view of all consoles and stands together with installation arrangements
- Control wiring diagram, wiring type and cross sections and nominal parameters along with overcurrent settings of all circuit protections
- Control piping diagram, piping material and dimensions, valves and overpressure protective devices, pressure reducing valves for all control piping systems
- Communication system diagram, arrangements and details

3.3 Documentation

The following documentation is to be submitted for review:

- A schematic or logic diagram, with a written description, giving the sequence of events and systems operating procedures for control of all diving functions and related operations
- A list of materials, fittings, contacts, supports of all components
- A list of type and extent of enclosure for all components

- Electric feeder list
- Generators, motors, battery characteristics

3.5 Calculations and Data

The following calculations and data are to be submitted:

- Data in order to establish that the electrical protective devices on each control console have a sufficient short circuit interrupting capacity
- A booklet with standard wiring practices and details including such items as cables and pipe supports, bulkhead and deck penetrations and sealing, cable splicing, watertight and explosion proof connections to equipment as applicable.

3.7 Basis of Review

The basis of the review by the American Bureau of Shipping will be the Sections of these Rules and the *Steel Vessel Rules* as applicable (or other recognized standards provided they are not less effective) and the following requirements.

5 Location of Dive Control Station

A dive control station may be located on the shore or on an offshore platform close to and in sight of the diving location.

The position of the dive control station is to allow the operations control personnel an overview of all systems and activities associated with the operations of the underwater vehicle and the dive. It is not to be located in hazardous areas.

When selecting the location of the dive control station, ship's motion or support structure vibrations are to be considered.

The dive control station is to be provided with air conditioning for control consoles when required by the operational characteristics of electronic components within the consoles.

The leading of pipes in the vicinity of control consoles is to be avoided as far as possible.

When such leads are necessary, care is to be taken in order to fit no flange or joints over or near the consoles, or stands, unless provision is made to prevent any leakage from injuring equipment.

The dive control station is to be provided with effective fire protection on all delimiting walls, bulkheads and decks.

7 Construction and Mechanical Protection

All enclosures in the dive control station are to be drip-proof and corrosion resistant when completed and are to be made of one or a combination of the following materials:

- Cast metal, except die-cast metal, at least 3 mm ($^1/_8$ in.) thick at every location.
- Non-metallic materials that have acceptable strength, and are non-combustible and non-absorptive (e.g., laminated phenolic material).
- Sheet metal of adequate strength. The supporting framework for all panels is to be of rigid construction. No wood is to be used, except for hardwood for non-conducting handrails.

The dive control station is to be located in a dry place. Clear working space is to be provided around panels, consoles and stands to enable doors to be fully opened and equipment removed for maintenance and replacement. Consoles, panels and stands are to be firmly secured to a solid foundation, be self-supported or be braced to the bulkheads.

9 Enclosed Dive Control Stations

Enclosed dive control stations are to have two means of access located as remote from each other as practicable.

Glass windows in the control station are to be of shatter-resistant type.

Sufficient light fixtures are to be installed to provide 540 lumens/m^2 (50 foot-candles) over all control stands, consoles and panels.

11 Controls, Displays and Alarms

11.1 General

Controls, displays and alarms are to provide for safe and reliable performance of all the required functions carried out from the dive control station.

Fire detection and fire fighting systems are to be provided for the protection of the station and are to be operable from outside the protected spaces.

Controls for fire fighting systems intended for the protection of diving facilities (e.g., deck decompression chambers, handling systems) are to be located in or as close as possible to the control station.

11.3 Control Consoles

All controls, displays and alarms are to be located and arranged in centralized positions and constructed in accordance with practices suitable for the service.

A separate control console is to be provided for each independently operated deck decompression chamber and underwater unit, and its handling system.

11.5 Displays and Alarms

The following operating parameters are to be monitored at the dive control station for each manned chamber and underwater unit:

- Pressure or depth
- Temperature
- Humidity
- Partial oxygen pressure
- Partial CO_2 pressure
- Pressure of connected breathing gas bottles
- Pressure at pressure reducing outlets
- Oxygen content in supply lines to chamber and compartment and to breathing masks
- Battery charge and discharge, voltmeter, ammeter and a capacity indicator
- Power supply distributions, voltmeter, ammeter and frequency meter if alternating current is used
- Electric leakage indicator for all chambers and compartments
- Fire alarm display panels
- Safety and signaling system monitors
- Display and control for breathing mixtures
- Environmental systems controls including heating and cooling system controls

13 Communications

Direct communication is to be provided among the following positions:

- Dive control station
- Dive control console on the support vessel
- Winch and crane local operation stand
- All compartments associated with saturation diving
- Master of the diving support vessel
- Underwater vehicle
- Diver in the water

Automatic recording of communication between the submersible and the control station is to be possible.

15 Testing

Testing of all equipment, apparatus, wiring and piping is to be conducted in accordance with these Rules and the *Steel Vessel Rules* in the presence and to the satisfaction of the Surveyor.

17 Trials

Before certification, all control systems are to be tested for proper functions and operations.

19 Surveys After Construction

19.1 Surveys

The surveys after construction for dive control stations are to be in accordance with the applicable requirements as contained in the ABS *Rules for Survey After Construction (Part 7)*.

APPENDIX 3 Certification of Chambers, Diver Training Centers and Dive Simulators

1 Certification

Deck decompression chambers, diver training centers and chambers of dive simulators that comply with the requirements of this Appendix and have been built under the supervision of the Surveyor to the Bureau will be issued an appropriate certificate as indicated in Appendix 1.

3 Submissions of Plans, Calculations and Data

Before commencement of fabrication, plans and other documentation giving the required particulars are to be submitted in triplicate. Vendor plans and other documentation are to be submitted in quadruplicate if fabrication site is different from installation site. An additional copy of all plans and documentation is to be available to the Surveyor performing surveys after construction at the location where the unit or system is operated.

3.1 Plans

The following plans are required for the Bureau's review and approval and are to be submitted as applicable to the particular design features:

- General arrangement showing principal dimensions, location of viewports, location of systems and equipment, design pressure, design temperature, number of occupants in each chamber and in the system (or complex), expected maximum mission time and net volume of chamber measured internally.
- Pressure vessel fabrication including scantlings and dimensioned weld details, out-of-roundness and fabrication tolerances, material specifications, degree of nondestructive testing, hydrostatic test pressure
- Openings and reinforcement details
- Welding procedures and PQR's
- Outboard profile
- Foundations and support arrangements
- Life support systems, both normal and emergency, with indicated capacities
- Dimensioned details of viewports, penetrations, hatch details, hatch rings and lugs
- Fire protection, detection and fighting equipment
- Emergency systems
- Electrical systems

- Piping systems including fittings, valves, hoses, pump capacities and pressure relief devices
- Details of permanently installed breathing gas flasks
- Umbilical details
- Details of diver heating systems
- Sanitary systems
- Communication systems
- Control hydraulic, electric and pneumatic power systems
- Atmosphere and breathing gas analyzing systems
- Compressors and breathing gas mixtures
- Helium reclaim systems
- Transfer and mating systems
- Hyperbaric evacuation system
- Local and remote control systems and control consoles

3.3 Documentation

The following documentation is to be submitted for review, as applicable:

- A schematic or logic diagram giving the sequence of the diving procedure
- Operating procedures
- Procedure for manual and emergency electric power, breathing gas and water supplies
- List of degree of enclosure of all components
- List of materials, fittings, contacts, support of all components
- Electric feeder list, giving feeder protection and user protections and their settings
- Generators, motors and batteries characteristics

3.5 Calculations and Data

The following calculations and data are to be submitted, as applicable:

- Pressure vessel stress analysis, including window calculations in compliance with Section 7, and design analysis
- Life support system analysis
- Analysis of a total loss of power (emergency)
- Electrical load analysis and electric fault analysis including power source and power requirements of units
- Foundation stress analysis
- Lifting stress analysis
- Standard wiring practices and details including such items as cables, wires, conduit sizes and their support, pressure boundary penetrations and sealing arrangements, cable splicing, watertight and explosion proof connections
- Results of tests witnessed by the Surveyor including hydrostatic test results, system operational test results, materials test results, operational test results of the completed chamber at rated pressure and out-of-roundness measurements

5 Manuals

5.1 Operating Manual

An operating manual describing normal and emergency operational procedures is to be provided and is to be submitted for review.

- System description
- Operational mission times and pressure capabilities
- Life support system description including capacities
- Methods for recharging life support systems
- Electrical system description
- Operation check-off lists (list to include equipment requiring maintenance or inspection prior to each dive/operation and verification of the existence of appropriately updated maintenance schedule – see A3/5.3)
- Emergency procedures, developed from systems analysis, for situations such as power failure, loss of communications, life support system malfunction, fire, etc.
- Liaison with support vessels
- Special restrictions based on uniqueness of design and operating conditions
- Color-coding adopted

5.3 Maintenance Manual

A maintenance manual containing procedures for periodic inspection and preventive maintenance techniques is to be submitted for review. The manual is to include the expected service life of the pressure hull and of other vital components/equipment (e.g., viewports, batteries, etc.), along with particular instructions for the maintenance of items requiring special attention.

5.5 Availability *(2007)*

The operating and maintenance manuals together with operational and maintenance records are to be readily available at the operational site and copies are to be made available to the Surveyor upon request. Summarized procedures for normal and emergency operations are to be carried on board the unit.

7 Design

The design of the chamber is to comply with Section 6 of these Rules.

9 Chamber's Capacity

Chambers are to have at least one bunk for each two occupants and are to have internal dimensions sufficient to accommodate a diver lying in a horizontal position and another person tending the diver.

11 Locks

Chambers are to have locks for ingress and egress of personnel and equipment while the occupants are under pressure. Man-way locking devices, except shipping dogs, which are intended to be disabled during service, are to be operable from both sides of a closed hatch. Locks which are capable of being accidentally opened under pressure are to be protected with interlocks.

13 Pressure Equalization

Means are to be provided for equalizing pressure on each side of the hatch prior to hatch opening.

15 Pressure Relief Devices

Each compartment is to be provided with a pressure relieving device to prevent the pressure from rising more than 10% above the maximum allowable working pressure. A quick operating manual shut-off valve is to be installed between the compartment and the pressure relief device and is to be wired open with frangible wire. Rupture discs are not to be used, except in series with pressure relief valves.

17 Viewports

Chambers are to be provided with sufficient number and size of viewports to allow bunks to be seen as much as possible over their entire lengths from the exterior. Viewport design, fabrication, installation, inspection and testing are to comply with Section 7 of these Rules.

19 Engineering Systems

Engineering systems of chambers, dive training centers and dive simulators are to comply with Section 9 of these Rules as applicable.

21 Mechanical Equipment

Mechanical equipment of chambers, diving training centers and dive simulators are to comply with Section 10 of these Rules as applicable.

23 Shut-off Valves

A manually operated stop valve is to be provided at each pressure boundary piping penetration. All interior breathing and pressure supply controls are to be provided with means of overriding and controlling them from the exterior.

25 Anti-Suction Devices and Check Valves

Anti-suction protective devices are to be provided inside chambers on exhaust outlet lines. Check valves are to be provided close to and downstream of the pressure boundary shut-off valves on lines used exclusively for supply.

27 Materials

27.1 Pressure Boundaries

Materials utilized for pressure boundaries of chambers are to comply with Section 4 of these Rules.

27.3 Internal Materials *(2002)*

Materials and equipment inside manned compartments are to be such that they will not give off noxious or toxic fumes within the limits of anticipated environments or under fire conditions. Where compliance with this requirement has not been demonstrated through satisfactory service experience, a suitable analysis or testing program is to be performed or submitted. Systems are to be designed and equipped to minimize sources of ignition and combustible materials.

Linings, deck coverings, ceilings, insulation, partial bulkheads, seating and bedding are to be constructed of materials that are fire-restricting under the anticipated environmental conditions.

27.5 Paints, Varnishes and Coatings

Excessive paint, varnish and coating thicknesses on exposed interior surfaces are discouraged unless noncombustible materials are used. Nitrocellulose or other highly flammable or noxious fume-producing paints are not to be used.

27.7 Access

Hatch coaming ways are to be free from obstacles.

29 Fabrication

Chamber fabrication is to comply with Section 5 of these Rules.

31 Life Support

31.1 Normal System

Chambers are to have normal life support systems that comply with Section 8 of these Rules.

31.3 Emergency System

In addition to the normal breathing gas and CO_2 removal systems, an emergency life support system is to be provided. The emergency system is to be independent of the normal system. Where open circuit systems are used, the effects of increased chamber pressure are to be considered. Emergency breathing gas is to be supplied to either full-face masks or oral-nasal masks suitable for the intended service. One mask per man plus one additional mask is to be provided in each compartment. The system is to be designed such that CO_2 levels in the gas being breathed do not exceed 0.0198 kg/m^3 (0.00123 lb/ft^3) (1percent by volume at one atmosphere). See 8/13.5 of these Rules for required duration of emergency life support system.

33 Pressure Gauges

Pressure gauges are to be provided for each compartment and are to be located outside the chamber.

35 Fire Fighting

Chambers are to be provided with internal and external, manually operated, means of extinguishing a fire internal or external to each chamber and its compartments. Fire detection and alarm systems are to be provided. The external system is to include provisions for cooling the viewports.

While the exterior fire fighting system may be sprinkling water, gaseous mediums used for interior fire fighting systems are to be suitable for use in manned spaces, and propellants of extinguishing mediums are to be nontoxic. Where pressurized systems are provided, consideration is to be given to the effect of compartment pressure on the discharge of the medium and the increase in compartment pressure resulting from the discharge of the medium. See also 3/3.7.

37 Communication *(2002)*

A two-way sound powered communication system is to be provided for each compartment. The system is to provide communication capability between the occupants and the outside monitor in the dive control station.

Speech unscramblers are to be provided when mixed gas is used.

Any non-sound-powered communication systems are to be supplied by two independent sources of power.

39 Electrical Installations

Electrical installations in chambers are to be limited to those necessary for safe operation of the chamber and the monitoring of its occupants and are to comply with Section 11.

Electrical equipment is to be such that pressurization and depressurization of the environment will not cause damage.

39.1 General

Wiring outside chambers is to utilize armored cables, or cables are to be run in conduits.

The structure of the chamber is not to be used as a current carrying conductor for power, heating, or lighting. Distribution systems are to be ungrounded. Ground detectors or interrupters are to be provided for all systems. Isolation transformers are to be provided for connections to ship's or shore power.

39.3 Circuit Protection

Circuits are to be protected from overloads and short circuits by devices which open all conductors and are located outside the chamber. The protective devices are to be circuit breakers except fuses may be used for immersion heaters.

39.5 Penetrators and Couplings for Electrical Services

Detail plans of all penetrators and couplings for electrical services together with the manufacturer's specifications and pressure ratings are to be submitted for review.

Penetrators and couplings are to be tested in accordance with 11/17.13 and 11/17.15 of these Rules and so certified by the manufacturer.

41 Illumination

Chambers are to have installed illumination which provides a general interior illumination level of at least 270 lumens/m^2 (25 foot-candles) with 540 lumens/m^2 (50 foot-candles) over bunks and in work areas.

43 Nameplates

Chambers are to be fitted with a permanent nameplate indicating manufacturer's name, date of fabrication, maximum allowable working pressure, rated temperature, serial number and hydrostatic test pressure. This information is also to be stamped on a rim of a flange of the unit. The plates are to be stainless steel or other suitable material and are to be permanently attached.

45 Pressure Test

The pressure boundaries of the chambers are to be subjected to hydrostatic pressure tests in the presence of the Surveyor. The tests are to be conducted with chambers on their actual supports or supports similar to the actual supports. The test pressure is to be 1.5 times the maximum allowable working pressure. Refer to Subsection 7/19 for test requirements for acrylic components. Pressurization and depressurization rates are not to exceed 46 kg/cm^2 (650 psi) per minute. When the pressure boundary is designed to an acceptable standard other than these Rules, hydrostatic testing is to be conducted in accordance with that standard.

47 Functional Tests

Completed chambers are to be subject to functional tests in the presence of the Surveyor. Satisfactory operation at the maximum allowable working pressure, using the normal breathing gas, is to be demonstrated for life support systems, locks, shut-off valves, communication and electrical systems.

49 Alterations

No alterations which may affect certification are to be made unless plans of the proposed alterations are submitted and approved by the Bureau before the work of alterations is commenced and such work, when approved, is carried out under the supervision of the Surveyor.

51 Surveys After Construction

51.1 Surveys

The surveys after construction for chambers, diver training centers and dive simulators are to be in accordance with the applicable requirements as contained in the ABS *Rules for Survey After Construction (Part 7)*.

This Page Intentionally Left Blank

APPENDIX 4 Certification of Handling Systems

1 Certification

Handling systems of underwater vehicles and hyperbaric facilities which comply with the requirements of this Appendix and have been built under the supervision of the Surveyor to the Bureau will be issued an appropriate certificate as indicated in Appendix 1. The certificate is to indicate the environmental conditions for which the handling system has been designed, approved and tested. See Table 1 of this Appendix. The certificate is to be included in the Record of Certification maintained by the Owner. See Subsection A4/33 of this Appendix.

3 Definitions *(2009)*

3.1 Handling System (Launch and Recovery System) *(2002)*

A system supporting launch, recovery and other handling operations of underwater units, hyperbaric facilities and their ancillary equipment and may include cranes, booms, masts, frames, davits, foundations, winches and associated hydraulic and electrical systems as necessary for the intended operations.

3.3 Rated Load or Safe Working Load *(2009)*

The rated load or safe working load is the maximum load that the assembled handling system is certified to lift at its rated speed when the outermost layer of rope or umbilical is being wound on the winch drum, under the parameters specified in the equipment specifications (e.g., hydraulic pressures, electrical current, electrical voltages, etc.).

3.5 Design Load *(2009)*

The design load is the maximum expected load on the handling system which consists of an appropriate combination of the rated load (see A4/3.3), dynamic effects associated with the rated load, weight of the rigging (hooks, blocks, deployed rope, etc.) and other applicable loads such as, wind load, drag, added mass effect and weight of entrained mud and water. See also Subsection A4/9.

3.7 Rigging *(2009)*

Rigging is a general term for all ropes and other gear (hooks, blocks, etc.) used in handling systems.

3.7.1 Running Rope

Running rope consists of moving or movable rope (wire rope, fiber or synthetic line) that passes over sheaves or through rollers and is used for hoisting, lowering or moving equipment.

3.7.2 Standing Rope

Standing rope consists of non-moving or non-movable rope that provides support to the structures of the handling system such as the A-frame, masts, etc.

3.7.3 Rotation-Resistant Rope

A rope designed to resist spin or rotation under load.

5 Submission of Plans, Calculations and Data

Before commencement of fabrication, plans and other documentation giving the required particulars are to be submitted in triplicate. Vendor plans and other documentation are to be submitted in quadruplicate if fabrication site is different from installation site. An additional copy of all plans and documentation is to be available to the Surveyor performing surveys after construction at the location where the handling system is operated.

5.1 Plans *(2009)*

The following plans are required for the Bureau's review and approval and are to be submitted as applicable to the particular design features:

- General arrangements showing the equipment locations and indicating the safe working load of the assembled handling system
- Details indicating sizes, sections, and locations of all structural members
- Winch drum and flange details
- Material specifications
- Dimensioned weld joint details
- Welding procedures and NDT methods
- Type and size of rivets, bolts, and foundations
- Foundation and support arrangements
- Hydraulic piping systems, materials, sizes, details of fittings, and valves and overpressure protective devices
- Electrical systems, cable, and wiring types and sizes, nominal characteristics and overcurrent protection settings of all electrical protections
- Rope sizes and data indicating material, construction, quality, and breaking strength
- Manufacturer's ratings, braking capabilities, and power drive requirements for electrical, hydraulic, and mechanical equipment
- Details of emergency source of power

5.3 Documentation

The following documentation is to be submitted for review, as applicable to the particular design features:

- A schematic or logic diagram giving the sequence of handling operations
- Operating procedures
- Procedures for operating normal and emergency electric, pneumatic and hydraulic power supplies
- List of degrees of enclosure of all electrical components
- List of materials, fittings, contacts and support for all components
- Electric feeder list
- Motors and battery characteristics

5.5 Design Analyses and Data

Design stress analysis, based on recognized engineering analytical methods and including environmental conditions, load plans indicating loads, shears, moments and forces for all rope members, strength welds, and connections including interaction forces with the supporting deck are to be submitted. (When the results of computer calculations are submitted, input data, summaries of input and program assumptions, output data, and summaries of conclusions drawn from the output data are to be included as part of the design analysis.) In addition, the following analyses are to be submitted as applicable to the particular design features.

- Foundation stress analysis
- Electric load and electric fault analysis including power source and power requirements
- Standard wiring practice and details, including such items as cables, wires, conduit sizes and their support, cable splicing, watertight and explosion proof connections
- Strain gage measurements may be required for novel designs or in association with acceptance of computer data

7 Manuals

7.1 Operating Manuals

An operating manual describing normal and emergency operational procedures is to be provided and is to be submitted for review. The manual is to include the following as applicable.

- Operation check-off list (to include list of equipment requiring maintenance or inspection prior to each operation and verification of the existence of appropriately updated maintenance schedule. (See A4/7.3.)
- System description
- Electrical system description
- Hydraulic system description
- Pneumatic system description
- Sea state capabilities
- Maximum dynamic loads
- Handling operating procedures
- Liaison with support vessel
- Emergency procedures developed from system analysis for situations such as power failure, break in lifting cable, break in umbilical cord, loss of communication, etc.
- Special restrictions based on uniqueness of design and operating conditions

7.3 Maintenance Manual

A maintenance manual containing procedures for periodic inspection and preventive maintenance techniques is to be submitted for review.

The manual is to include the expected service life of vital components/equipment along with particular instructions for the maintenance of items requiring special attention.

7.5 Availability *(2007)*

The operating and maintenance manuals together with operational and maintenance records are to be readily available at the operation site and copies are to be made available to the Surveyor upon request. Summarized procedures for normal and emergency operations and essential drawings are to be carried with the unit.

9 Design

Design calculations are to be based on recognized standards or recognized engineering methods, which are to be clearly referenced in the required calculations. Some recognized analytic methods are contained in "Specifications for the Design, Fabrication, and Erection of Structural Steel for Buildings Part I," published by the American Institute of Steel Construction and "Specifications for Aluminum Structures," published by the Aluminum Association.

9.1 Factors of Safety

9.1.1 Wire Rope *(2009)*

The factor of safety is to be not less than 5 for both conventional and rotation-resistant running rope. The factor of safety for standing rope is to be not less than 4.0. These factors of safety are to be based on the design load of the system as compared to the minimum breaking strength of the rope.

9.1.2 Fiber and Synthetic Rope *(2009)*

Safety factors for fiber and synthetic rope except nylon are to be not less than 7.0 for running rope and 5.0 for standing rope based on the design load of the system as compared to the minimum breaking strength of the rope. Safety factors for nylon rope are to be not less than 9.0 for running rope and 7.0 for standing rope.

9.1.3 Structural Members in Axial Tension or Compression

Individual stress components for members in tension or compression are not to exceed the allowable stress obtained from the following equations:

$$F_a = F_y/1.33 \qquad \text{if } F_y/F_u \le 0.7$$

$$F_a = (F_y + F_u)/3.25 \qquad \text{if } F_y/F_u > 0.7$$

where

F_y = minimum specified yield strength of the material

F_u = minimum specified tensile strength of the material

9.1.4 Structural Members in Bending

Individual bending stress for members in bending is not to exceed the allowable stress specified in A4/9.1.3.

9.1.5 Structural Members Subject to Shear

The shear stress for members subject to shear is not to exceed the allowable stress obtained from the following equation:

$$F_s = 0.577F_a$$

9.1.6 Structural Members Subject to Combined Axial Compression and Bending

When structural members are subjected to axial compression in combination with compression due to bending the computed stresses are to comply with the following requirement:

$$(f_a/F_a') + (f_b/F_b) \leq 1.0$$

where

f_a = computed axial compressive stress

f_b = computed bending stress (compressive)

F_a' = allowable compressive stress, which is to be the least of the following:

i) F_a value as obtained from A4/9.1.3 for axial stress.

ii) F value as obtained from A4/9.1.11 for buckling.

F_b = allowable compressive stress due to bending as specified in A4/9.1.4.

Note: Above criterion for combined axial compression and compression due to bending is applicable when f_a/F_a' is less than or equal to 0.15. Otherwise, formulation in Section 1.6 of AISC "Specifications for the Design Fabrication and Erection of Structural Steel for Buildings Part 1" is to be followed.

9.1.7 Structural Members Subject to Axial Tension and Bending

When structural members are subjected to axial tension combined with tension due to bending, the computed stresses are to comply with the following requirement:

$$f_a + f_b \leq F_a$$

where F_a is defined in A4/9.1.3.

9.1.8 Riveted Joints

Rivets are not to be subjected to tension. Riveted joints are to have at least two rivets aligned in the direction of the force. The computed shear stress is not to exceed the allowable stress, F_s, as obtained from the following equations:

$F_s = 0.6F_a$ (single shear)

$F_s = 0.8F_a$ (multiple shear)

The computed bearing pressure on walls of holes is not to exceed the allowable stress, F_N, as obtained from the following equations:

$F_N = 1.5F_a$ (single shear)

$F_N = 2.0F_a$ (multiple shear)

9.1.9 Bolted Joints

The computed stresses in bolts are not to exceed the following allowable values:

Tension: $F_T = 0.65F_a$

Shear: $F_s = 0.6F_a$ (single shear)

$F_s = 0.8F_a$ (multiple shear)

Combined: $(F_T^2 + 3F_s^2)^{1/2} = F_a$

The computed bearing pressure on walls of holes is not to exceed the allowable stress, F_N, as obtained from A4/9.1.8.

9.1.10 Structural Members Subject to Crippling

The computed crippling of the structural member is not to exceed 75% of the yield stress.

9.1.11 Structural Members Subject to Buckling

When buckling of a structural member due to compressive or shear stresses or both is a consideration, the compressive or shear stress is not to exceed the allowable stress, F, as obtained from the following equations:

$F = F_{cr}/1.25$ (for flat members)

$F = F_{cr}/1.55$ (for curved members)

where

F_{cr} = critical buckling stress in compression or shear of the structural member, appropriate to its dimensional configuration, boundary condition, loading pattern, material, etc.

9.1.12 Aluminum

Tensile and yield strengths for welded aluminum alloys are to be in accordance with 5/9.3.

9.1.13 Chains

Chains are to have a safety factor of 4.5 based on their minimum specified ultimate strength. Chains are not to be subjected to torsional loads.

9.3 Design Loads *(2008)*

The following loads and forces are to be taken into account when designing structural members and joints.

9.3.1 Dead Load

The minimum dead load assumed in design is to consist of the weight of structural parts of the launch and recovery system and materials permanently attached to the structure.

9.3.2 Live Load

The live load is to be based on the maximum weight in air of the underwater vessel or related systems together with all weights, including personnel, tools, consumables, and water in the vessel to be carried by the system.

9.3.3 Other Loads

Added mass, entrained water and mud, etc.

9.3.4 Dynamic Loads

These are loads produced by accelerations in the vertical, longitudinal and transverse directions. As a minimum, loads resulting from simultaneous accelerations of 1 g (in addition to static gravitational acceleration – a total of 2 g) vertical, 1 g transverse, and 1 g longitudinal are to be used for design except for handling systems intended solely for units not associated with manned operations (e.g., ROV launch and recovery systems) in which case the foregoing minimum dynamic loads may be reduced by 25 percent (to 1.75 g, 0.75 g and 0.75 g). For permanently installed systems, consideration may be given to lesser loads where it can be shown that the maximum expected loads are less than those given above.

9.3.5 Wind Forces

The wind load on the projected area of the structure is to be considered as a design assumption at a value appropriate to the design conditions.

9.3.6 Maximum Forces

Structural members are to be determined using the maximum appropriate combination of the loads and factors of safety above.

9.5 Structural Members

Structural members are not to be less than 6.4 mm ($^1/_4$ in.) thick and are to be suitably protected from corrosion.

9.7 Power Systems

Power systems and equipment are to be designed for 100% of the design load. Electric motors may have continuous ratings less than ratings corresponding to the design load and suitable short time ratings not less than the design load when such ratings are supported by the design analysis.

9.9 Sheave and Drum Sizes

The minimum ratio of pitch diameter to rope diameter for sheaves and drums is to be as listed below:

Wire rope	
Application	*Ratio, min.*
Load block sheaves	16:1
Load hoisting sheaves	18:1
Load hoisting drums	18:1
Boom hoisting sheaves	15:1
Boom hoisting drums	15:1
Fiber and synthetic rope	
All applications	8:1

11 Structural Materials

11.1 General

Structural materials are to be suitable for the intended service conditions. They are to be of good quality, free of injurious defects and are to exhibit satisfactory formability and weldability characteristics. Materials used in the construction of the handling systems are to be certified by the mill and verified by ABS Surveyors. Material is to be clearly identified by the steel manufacturer with the specification, grade and heat number.

11.3 Toughness

For handling systems with design service temperature of –10°C (14°F) and colder, primary structural members such as those listed in Subsection A4/13 are to be in conformity with the toughness criteria in Subsection A4/15. For systems with design service temperature warmer than –10°C (14°F), primary structural members are to have fracture toughness satisfactory for the intended application as evidenced by previous satisfactory service experience or appropriate toughness tests similar to those in Subsection A4/15.

11.5 Additional Requirements

In cases where principal loads from either service or weld residual stresses are imposed perpendicular to the material thickness, the use of special material with improved through thickness (Z direction) properties is required. Material complying with paragraph 2-1-1/17 of the ABS *Rules for Materials and Welding (Part 2)* is considered as meeting this requirement.

11.7 Steel

Materials, test specimens, and mechanical testing procedures having characteristics differing from those prescribed herein may be approved upon application, due regard being given to established practices in the country in which the material is produced and the purpose for which the material is intended. Wrought iron is not to be used.

11.9 Other Material

Materials other than steel will be specially considered.

11.11 Bolting

Bolts subjected to tensile loading (other than pretensioning) employed in joining of critical components of handling systems are to be selected to meet strength, fracture toughness, and corrosion resistance requirements for the intended service and are to be in accordance with a recognized bolting standard. Round bottom or rolled thread profiles are to be used for bolts in critical bolt connections.

13 Primary Structural Members

The following load-carrying structural members are to meet the requirements of Subsection A4/15.

i) A-frame, mast or gantry chord members

ii) Boom or jib chord members

iii) Load carrying beams

iv) Winch and frame foundations

v) Luffing system mechanisms

vi) Pins and axles

vii) Eye plates and brackets attached to primary members

viii) Winches and structural components not covered in Appendix 4, Table 2

15 Material Toughness Requirements for Primary Structural Members of Handling Systems with Design Service Temperatures of –10°C (14°F) and Below

Appropriate supporting information or test data is to indicate that the toughness of the steels will be adequate for their intended application in the system at the minimum design service temperature. In the absence of supporting data, tests are required to demonstrate that steels would meet the following longitudinal Charpy V-notch (CVN) impact requirements.

15.1 Steels up to and Including 41 kg/mm^2 (58,000 psi) Yield Strength

Steels up to and including 41 kg/mm^2 (58,000 psi) yield strength are to meet the following longitudinal CVN requirements:

Yield Strength		*CVN (longitudinal)*		*Test Temperature*
kg/mm^2	*ksi*	*kg-m*	*ft-lb*	10°C (18°F) below design service temperature
24–31	34–44	2.8	20	
32–41	45.5–58	3.5	25	

15.3 Extra High Strength Steels above 41 kg/mm^2 (58,000 psi) Yield Strength

Steels in the 42–70 kg/mm^2 (60,000–100,000 psi) yield strength range are to meet the following longitudinal CVN impact requirements.

Design Service Temperature	*kg-m (ft-lb) at Test Temp*
–10°C (+14°F)	3.5 (25) at –40°C (–40°F)
–20°C (–4°F)	3.5 (25) at –40°C (–40°F)
–30°C (–22°F)	3.5 (25) at –50°C (–58°F)

15.5 Alternative Requirements

As an alternative to the requirements in A4/15.1 and A4/15.3, one of the following may be complied with:

i) For transverse specimens, $^2/_3$ of the energy shown for longitudinal specimens.

ii) For longitudinal specimens, lateral expansion is not to be less than 0.5 mm (0.02 in.). For transverse specimens, lateral expansion is not to be less than 0.38 mm (0.015 in.).

iii) Nil-ductility temperature (NDT) as determined by drop weight tests is to be 5°C (9°F) below the test temperature specified in A4/15.1 and A4/15.3.

iv) Other means of fracture toughness testing, such as Crack Opening Displacement (COD) testing, will be specially considered.

17 Rope

Rope is to be constructed in accordance with a recognized standard applicable to the intended service such as API Specification 9A and Federal Specification RR-W-410a.

19 Support Wire Winch

19.1 Operation

Systems are to satisfactorily operate when handling the design load at design conditions specified in A4/9.3.

19.3 Power Drives

Lowering of loads is to be controlled by power drives independent of brake mechanisms.

19.5 Emergency Lifting Devices

Auxiliary means (e.g., winches, prime movers) are to be provided for lifting the design load except where alternative lifting equipment adequate for the design load is provided onboard.

19.7 Brakes

Brakes are to have the ability to stop and hold 100% of the design load with the outermost layer of wire on the drum. Brakes are to set automatically on loss of power.

19.9 Testing

Testing of support winch is to be conducted in the presence of the Surveyor and is to demonstrate that rated line pull can be achieved at rated speed with the outermost layer of wire on the drum. Additionally, it is to be demonstrated that the brakes have the ability to stop and hold 100% of the design load as required by A4/19.7.

21 Welding

Welding procedures and welder qualifications are to be submitted and approved in accordance with Subsection 2-4-3/5 of the ABS *Rules for Materials and Welding (Part 2)*.

23 Nondestructive Inspection (NDT) of Welds

Inspection is to be in accordance with the *NDI Guide* or other recognized cases. The areas to be nondestructively inspected and methods of inspection are to be submitted together with the design plans. The Surveyor is to be provided with records of NDT inspections. The Surveyor may require additional inspections, at his discretion.

25 Surveys and Tests During Construction

25.1 Surveyor Attendance

Certification of launch and recovery systems will require attendance of the Surveyor at the plants of the supplier of component parts of the system to ensure proper quality control procedures are in effect. The number and frequency of these visits is to be as the Surveyor may require.

25.3 Static Load Tests *(2009)*

A static test load of 100% of the design load is to be applied to the structural components of the completed handling system in the presence of the Surveyor.

25.5 Original Tests on Handling Systems

25.5.1 Loose Gear

25.5.1(a) Tests. All chains, rings, hooks, links, shackles, swivels, and blocks of the handling system are to be tested in the presence of the Surveyor with a proof load at least equal to the values in Appendix 4, Table 2.

25.5.1(b) Examination. After tests, gear is to be examined with the sheaves and the pins removed for the purpose of determining whether vital parts have been permanently deformed by the test.

25.5.1(c) Certificates. Articles of loose gear are to have a certificate written by the Surveyor. The certificate is to contain the distinguishing number or mark applied to the article or gear, a description of the particular article or gear, the material specification, date of tests, proof load applied and safe working load. These data are to be attached to the Record of Certification.

25.5.2 Rope Test

Each rope is to have a certificate of test furnished by the manufacturer, supplier, or the Surveyor indicating the load at which a test sample broke. This certificate is to show size of rope in inches, number of strands, number of wires per strand, quality of wires, and date of test, and is to be attached to the Record of Certification.

27 Functional Test *(2008)*

Prior to the system being placed in service, the system is to be tested with a load equal to 125 percent of the rated load in the presence of the Surveyor. Satisfactory operation of power drives, emergency lifting devices, and brakes is to be demonstrated. After being tested, the system with all its components is to be examined visually for permanent deformation and failure. A copy of the certificate of tests witnessed and issued by the Surveyor is to be attached to the Record of Certification.

29 Repairs and Alterations

Alterations, significant repairs and component renewals, are to be carried out under the supervision and to the satisfaction of the Surveyor. Tests and examinations are to be carried out as deemed necessary by the Surveyor. Reports of these tests and examinations are to be placed in the Record of Certification.

31 Running Rope Maintenance Program

31.1 Lubrication of Wire Rope

The entire rope is to be lubricated with a lubricant that will penetrate and adhere to the rope. Lubrication is to be applied whenever there is no apparent lubrication between wires. Records of lubrication applications are to be maintained as part of the Record of Certification.

31.3 Ends Exchange

The ends of rope are to be exchanged every twelve months. Records of such exchange are to be maintained as part of the Record of Certification.

31.5 Testing *(2009)*

Following each ends exchange, except the first exchange, a section is to be removed from the end of the rope. The length of the section is to be the running distance from the drum through the system and terminating with the end on the deck. A sample from the remaining rope is to be tested to determine its breaking strength. When the breaking strength is less than 5.0 times the design load of the system for wire rope, 7.0 times the design load for fiber or synthetic rope (except nylon), and 9.0 times the design load for nylon rope, the rope is to be renewed.

33 Record of Certification

A Record of Certification is to be maintained by the Owner and is to be made available to the Surveyor at the time of repairs and periodical surveys. The Record is to consist of the following:

- Manuals indicating the design criteria, a description of the operating cycle and a set of design plans indicating the materials used in construction. See Subsection A4/7.
- Certificate for Handling Systems (see Subsection A4/1).
- Certificates for items of loose gear (see A4/25.5.1).
- Certificates for rope components (see A4/25.5.2).
- Report of tests and surveys during construction (see A4/25.1 and A4/25.3).
- Report of initial tests and examinations to system as a unit (see Subsection A4/27).
- Report of tests and examinations following repairs or design modifications (see Subsection A4/29).
- Rope maintenance program (see Subsection A4/31).
- Report on surveys after construction (see Subsection A4/35).

35 Surveys After Construction

35.1 Surveys

The surveys after construction for handling systems are to be in accordance with the applicable requirements as contained in the ABS *Rules for Survey After Construction (Part 7)*.

TABLE 1
Wind and Sea Scale for Fully Arisen Sea

		Wind				Sea						
Sea State	*Description*	*Beaufort wind force*	*Description*	*Range, knots*	*Wind velocity, knots*	*Wave Height, ft*		*Significant range of periods, sec.*	*T average period*	*ℓ average wave length*	*Minimum fetch, nmi*	*Minimum duration, hr*
						Average	*Average 1/10 highest*					
0	Sea like a mirror.	0	Calm	Less than 1	0	0	0					
	Ripples with the appearance of scales are formed, but without foam crests.	1	Light airs	1–3	2	0.05	0.1	Up to 1.2 sec	0.5	10 in.	5	18 min
1	Small wavelets, still short, but more pronounced; crests have a glassy appearance, but do not break.	2	Light breeze	4–6	5	0.18	0.37	0.4–2.8	1.4	6.7 ft	8	39 min
1 2	Large wavelets, crests begin to break. Foam of glassy appearance. Perhaps scattered white horses.	3	Gentle breeze	7–10	8.5 10	0.6 0.88	1.2 1.8	0.8–5.0 1.0–6.0	2.4 2.9	20 27	9.8 10	1.7 hr 2.4
2 3	Small waves, becoming larger; fairly frequent white horses.	4	Moderate breeze	11–16	12 13.5 14 16	1.4 1.8 2.0 2.9	2.8 3.7 4.2 5.8	1.0–7.0 1.4–7.6 1.5–7.8 2.0–8.8	3.4 3.9 4.0 4.6	40 52 59 71	18 24 28 40	3.8 4.8 5.2 6.6
4 5	Moderate waves, taking a more pronounced long form; many white horses are formed (chance of some spray).	5	Fresh breeze	17–21	18 19 20	3.8 4.3 5.0	7.8 8.7 10	2.5–10.0 2.8–10.6 3.0–11.1	5.1 5.4 5.7	90 99 111	55 65 76	8.3 9.2 10
5 6	Large waves begin to form; the white foam crests are more extensive everywhere (probably some spray).	6	Strong breeze	22–27	22 24 24.5 26	6.4 7.9 8.2 9.6	13 16 17 20	3.4–12.2 3.7–13.5 3.8–13.6 4.0–14.5	6.3 6.8 7.0 7.4	134 160 164 188	100 130 140 180	12 14 15 17
6 7	Sea heaps up and white foam from breaking waves begins to be blown in streaks along the direction of the wind (spindrift begins to be seen).	7	Moderate gale	28–33	28 30 30.5 32	11 14 14 16	23 28 29 33	4.5–15.5 4.7–16.7 4.8–17.0 5.0–17.5	7.9 8.6 8.7 9.1	212 250 258 285	230 280 290 340	20 23 24 27
7 8	Moderately high waves of greater length; edges of crests break into spindrift. The foam is blown in well-marked streaks along the direction of the wind. Spray affects visibility.	8	Fresh gale	34–40	34 36 37 38 40	19 21 23 25 28	38 44 46.7 50 58	5.5–18.5 5.8–19.7 6.0–20.5 6.2–20.8 6.5–21.7	9.7 10.3 10.5 10.7 11.4	322 363 376 392 444	420 500 530 600 710	30 34 37 38 42
8 9	High waves. Dense streaks of foam along the direction of the wind. Sea begins to roll. Visibility affected.	9	Strong gale	41–47	42 44 46	31 36 40	64 73 81	7.0–23.0 7.0–24.2 7.0–25.0	12.0 12.5 13.1	492 534 590	830 960 1110	47 52 57
9	Very high waves with long overhanging crests. The resulting foam is in great patches and is blown in dense white streaks along the direction of the wind. On the whole, the surface of the sea takes a white appearance. The rolling of the sea becomes heavy and shock-like. Visibility is affected	10	Whole gale	48–55	48 50 51.5 52 54	44 49 52 54 59	90 99 106 110 121	7.5–26.0 7.5–27.0 8.0–28.2 8.0–28.5 8.0–29.5	13.8 14.3 14.7 14.8 15.4	650 700 736 750 810	1250 1420 1560 1610 1800	63 69 73 75 81

TABLE 1 (continued)
Wind and Sea Scale for Fully Arisen Sea

		Wind				Sea						
Sea State	*Description*	*Beaufort wind force*	*Description*	*Range, knots*	*Wind velocity, knots*	*Wave Height, ft*		*Significant range of periods, sec.*	*T average period*	*ℓ average wave length*	*Minimum fetch, nmi*	*Minimum duration, hr*
						Average	*Average 1/10 highest*					
9	Exceptionally high waves (small and medium-sized ships might for a long time be lost to view behind the waves). The sea is completely covered with long patches of foam lying along the direction of the wind. Everywhere the edges of the wave crests are blown into froth. Visibility affected.	11	Storm	56–63	56 59.5	64 73	130 148	8.5–31.0 10–32	16.3 17.0	910 985	2100 2500	88 101
	Air filled with foam and spray. Sea completely white with driving spray; visibility very seriously affected.	12	Hurricane	64–71	>64	>80	>164	10–(35)	(18)	~	~	~

TABLE 2
Loose Gear Tests

Article of Gear	*Proof Load* (1)
Chain, ring, hook, link, shackle, or swivel	100% in excess of the safe working load
Pulley blocks, single sheave block	300% in excess of the safe working load (2)
Multiple sheave block with safe working load up to and including 20,320 kg (20 tons)	100% in excess of the safe working load
Multiple sheave block with safe working load over 20,320 kg (20 tons) up to and including 40,640 kg (40 tons)	20,320 kg (20 tons) in excess of the safe working load
Multiple sheave block with safe working load over 40,640 kg (40 tons)	50% in excess of the safe working load

Notes:

1 Alternatively, the proof tests as recommended in the I.L.O. publication "Safety and Health in Dock Work" may be accepted where the items of gear are manufactured or tested or both and intended for use on vessels under jurisdictions accepting these recommendations.

2 The safe working load to be marked on a single block is to be the maximum load which can safely be lifted by the block when the load is attached to a rope which passes around the sheave of the block. In the case of single-sheave block where the load is attached directly to the block instead of to a rope passing around the sheave, it is permissible to lift a load equal to twice the marked safe working load of the block as defined in this note.

APPENDIX 5 Certification of Remotely Operated Vehicles (ROVs)

1 Certification

Remotely operated vehicles, their controls and handling systems which comply with the requirements of this Appendix and have been built under the supervision of the Surveyor to the Bureau will be issued an appropriate certificate as indicated in Appendix 1. The certificate is to indicate the function for which the remote operated vehicle and its ancillary equipment have been designed, approved and tested.

3 General

A remotely operated vehicle is an unmanned unit tethered to a support vessel or structure and designed for underwater viewing, cutting, cleaning or other underwater tasks.

5 Submission of Plans, Calculations and Data

Before commencement of fabrication, plans and other documentation giving the required particulars are to be submitted in triplicate. An additional copy of all plans and documentation is to be available to the Surveyor performing surveys after construction at the location where the ROV is operated.

5.1 Plans

The following plans are required for the Bureau's review and approval and are to be submitted as applicable to the particular design features:

- General arrangement showing equipment location
- Cross sectional assembly
- Details indicating sizes, sections, and location of each component
- Material specification and mill certificates
- Details of welded joints
- Welding procedures
- Type and size of all cables and wiring
- Manufacturer's rating, control capabilities, and power drive requirements for electrical, hydraulic and mechanical equipment
- Electric feeder scheme
- Nominal characteristics and overcurrent protection settings of all electrical protective devices

- Piping system details, materials, size of all fittings and valves and overpressure protective device
- Materials, size, design pressure, design temperature and supports for all pressure containers
- Plans for buoyancy and stability arrangements

5.3 Documentation

The following documentation is to be submitted for review as applicable to the particular design features:

- A schematic or logic diagram giving the sequence of control and handling functions
- Operating procedures
- Procedures for normal and emergency electric, pneumatic and hydraulic power supplies
- List of degree of enclosures of all electrical components
- List of materials, fittings, contacts, support of all components
- Electric feeder list
- Characteristics of motors and batteries

5.5 Design Analyses and Data

Design analyses based on recognized engineering methods, including evaluation of environmental conditions, loads or structural members and interaction forces with supports, are to be submitted as applicable to the particular design features.

When the results of computer calculations are submitted, input data, summaries of input and program assumptions, output data and summaries and conclusions drawn from the output data are to be included as part of the design analysis, as applicable.

Electric load and electric fault analysis including power source and power requirements

Support stress analysis and lifting forces

Standard wiring practice and detail, including such items as cable, wiring, conduit size and their supports, cable splicing, watertight and explosion proof connections and equipment

Pressure container stress analysis

Strain gauge measurements required for novel designs or in association with acceptance of computer data

Calculations of buoyancy and stability

7 Manuals

7.1 Operating Manual

An operating manual describing normal and emergency operational procedures is to be provided and is to be submitted for review. The manual is to include the following as applicable:

- Operational check-off list (including a list of equipment requiring maintenance or inspection prior to each dive/operation)
- System description
- Sea state capabilities
- Emergency procedures for situations such as power failure, break in tether or lifting cables, loss of control power etc.

- Electrical system description
- Hydraulic pneumatic system description
- Handling operation procedures
- Liaison with support vessel
- Any other function, procedure or restriction relevant to the particular remotely operated vehicle.

7.3 Maintenance Manual

A maintenance manual containing procedures for periodic inspection and preventive maintenance techniques is to be submitted for review. The manual is to include the expected service life of vital components along with particular instructions for the maintenance of items requiring special attention.

7.5 Availability

The operating and maintenance manuals together with operational and maintenance records are to be readily available at the operation site and copies are to be made available to the Surveyor upon request.

9 Design

The design calculations for a remotely operated vehicle are to be based on the below listed sections of these Rules or recognized engineering methods, which are to be clearly referenced in the required calculations.

9.1 Transparent Components

Transparent components of remotely operated vehicle are to comply with Section 7 of these Rules or other recognized standards.

9.3 Engineering Systems

Engineering systems of remotely operated vehicle are to comply with Section 9 of the Rules as applicable.

9.5 Mechanical Equipment

Mechanical equipment of remotely operated vehicle is to comply with Section 10 of these Rules as applicable.

9.7 Electrical Installations

Electrical installations are to comply with Section 11 of these Rules as applicable

9.9 Handling System

If certification of the ROV's launch and recovery system is requested, then the requirements of Appendix 4 of these Rules will be applicable (see also A4/9.3.4).

11 Access to Equipment

Sufficient access space for handling and maintenance is to be provided around equipment and tools of remotely operated vehicles.

13 Lifting Points

Lifting points are to be provided on the ROV and its removable equipment so that any work piece can be easily retrieved.

15 Instrumentation

Sufficient displays are to be provided at the control stand of the remotely operated vehicle to efficiently and reliably control each operation and each function of the remotely operated vehicle.

17 Deck Control Station

Deck control stations are to comply with Appendix 2 of these Rules as applicable except that a lesser degree of fire protection may be accepted.

19 Tests and Trials

The following tests are to be carried out in the presence and to the satisfaction of the Surveyor, and test results are to be submitted for evaluation:

i) External hydrostatic test of any pressure container at 1.25 times the maximum external pressure.

ii) Hydrostatic test at 1.5 time maximum allowable internal working pressure for components with internal pressure rating.

iii) Dimensional check prior to and after hydrostatic tests prescribed in *i)* and *ii)* above.

iv) Hydrostatic tests of piping systems to 1.5 times systems internal working pressure.

v) Instrumentation tests after calibration of instrumentation.

vi) Insulation test of all electrical equipment.

vii) System functional test at rated depth. Adequate static and dynamic stability and control of steering system are to be demonstrated during operational test dive.

viii) Tests of umbilicals and fittings.

21 Surveys After Construction

21.1 Surveys

The surveys after construction for remotely operated vehicles are to be in accordance with the applicable requirements as contained in the ABS *Rules for Survey After Construction (Part 7)*.

APPENDIX 6 IMO – Diving Bell Emergency Locating Device

(2009) Code of Safety for Diving Systems, Para. 2.12.5 of IMO Res. A.831 (19).

A diving bell should have as emergency locating device with a frequency of 37.5 kHz designed to assist personnel on the surface in establishing and maintaining contact with the submerged diving bell if the umbilical to the surface is severed. The device should include the following components:

.1 Transponder

.1.1

The transponder should be provided with a pressure housing capable of operating to a depth of at least 200 m containing batteries and equipped with salt water activation contacts. The batteries should be of the readily available "alkaline" type and, if possible, be interchangeable with those of the diver and surface interrogator receiver.

.1.2

The transponder should be designed to operate with the following characteristics:

Common emergency reply frequency	37.5 kHz
Individual interrogation frequencies:	
Channel A	38.5 ± 0.05 kHz
channel B	39.5 ± 0.05 kHz
Receiver sensitivity	+15 db referred to 1 μbar
Minimum interrogation pulse width	4 ms
Turnaround delay	125.7 ± 0.2 ms
Reply frequency	37.5 ± 0.05 kHz
Maximum interrogation rates:	
more than 20 percent of battery life remaining	Once per second
less than 20 percent of battery life remaining	Once per 2 seconds
Minimum transponder output power	85 db referred to 1 μbar at 1 m
Minimum transducer polar diagram	–6 db at ±135° solid angle, centered on the transponder vertical axis and transmitting towards the surface
Minimum listening life in water	10 weeks
Minimum battery life replying at 85 db	5 days

.2 Diver-held Interrogator/Receiver

.2.1

The interrogator/receiver should be provided with a pressure housing capable of operating to a depth of at least 200 m with pistol grip and compass. The front end should contain the directional hydrophone array and the rear end the 3-digit LED display readout calibrated in meters. Controls should be provided for "on/off receiver gain" and "channel selection". The battery pack should be of the readily available "alkaline" type and, if possible, be interchangeable with that of the interrogator and transponder.

.2.2 *(2009)*

The interrogator/receiver should be designed to operate with the following characteristics:

Common emergency reply frequency	37.5 kHz
Individual interrogation frequencies:	
channel A	38.5 kHz
channel B	39.5 kHz
Minimum transmitter output power	85 db referred to 1 μbar at 1 m
Transmit pulse	4 ms
Directivity	±15°
Capability to zero range on transponder	
Maximum detectable range	more than 500 m

2.12.6

In addition to the communication systems referred to above, a standard bell emergency communication tapping code should be adopted as given below for use between persons in the bell and rescue divers. A copy of this code should be displayed inside and outside the bell and also in the dive control room.

Bell Emergency Communication Tapping Code

Tapping code	*Situation*
3.3.3	Communication opening procedure (inside and outside)
1	Yes or affirmative or agreed
3	No or negative or disagreed
2.2	Repeat please
2	Stop
5	Have you a got a seal?
6	Stand by to be pulled up
1.2.1.2	Get ready for through water transfer (open your hatch)
2.3.2.3	You will NOT release your ballasts
4.4	Do release your ballast in 30 minutes from now
1.2.3	Do increase your pressure
3.3.3	Communication closing procedure (inside and outside)